STATE OF
NORTH CAROLINA
DEPT. OF TRANSPORTATION
DIVISION OF HIGHWAYS
RALEIGH, N.C.

7-06

ENGLISH STANDARD DRAWING FOR

REINFORCED BRIDGE APPROACH FILLS

CORED SLAB BRIDGES
15′ MINIMUM APPROACH SLAB

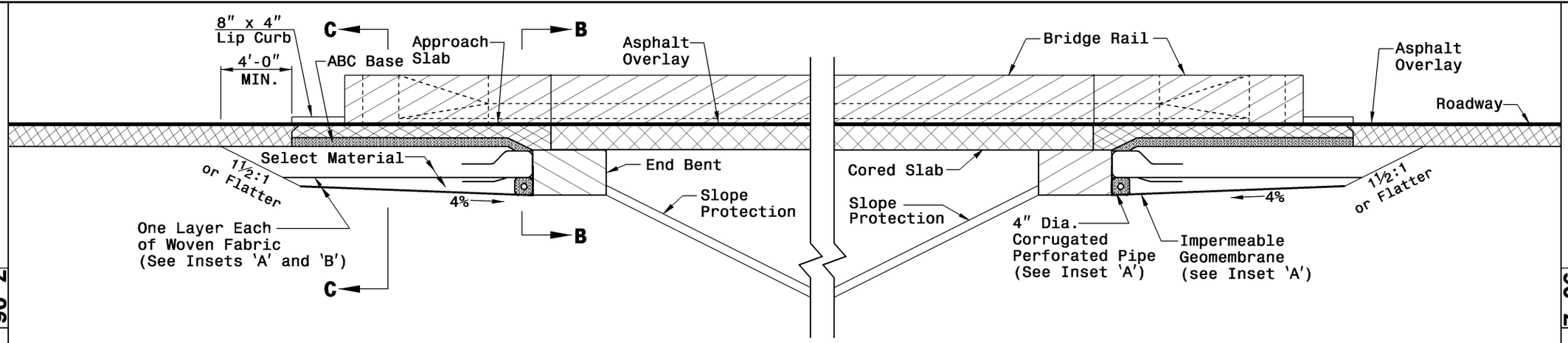

SECTION A-A

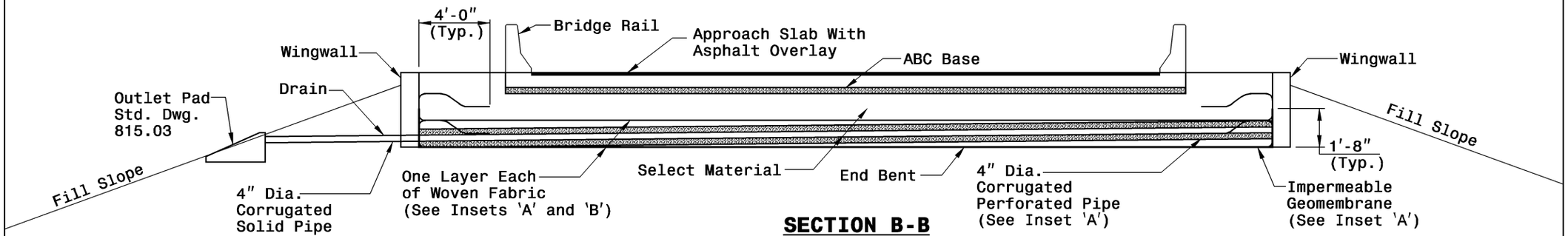

SECTION B-B

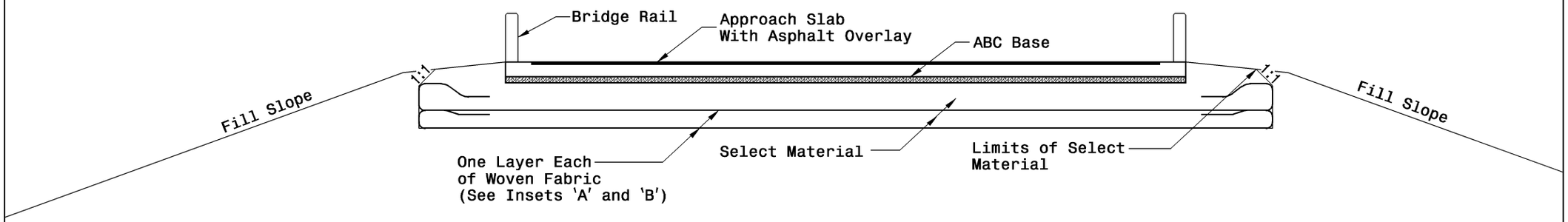

SECTION C-C

15′ MINIMUM APPROACH SLAB

STATE OF
NORTH CAROLINA
DEPT. OF TRANSPORTATION
DIVISION OF HIGHWAYS
RALEIGH, N.C.

7-06

ENGLISH STANDARD DRAWING FOR

REINFORCED BRIDGE APPROACH FILLS

CORED SLAB BRIDGES
15′ MINIMUM APPROACH SLAB

SHEET 3 OF 7
422.10