STATE OF
NORTH CAROLINA
DEPT. OF TRANSPORTATION
DIVISION OF HIGHWAYS
RALEIGH, N.C.

7-06

ENGLISH STANDARD DRAWING FOR

CONCRETE ENDWALL FOR SINGLE AND DOUBLE PIPE CULVERTS

15″ THRU 48″ PIPE - 90° SKEW

SHEET 2 OF 3

838.01

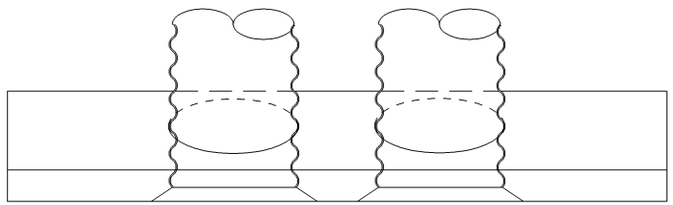

PLAN

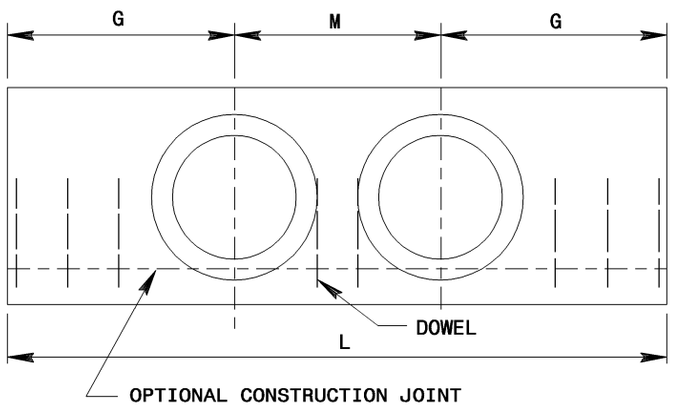

ELEVATION

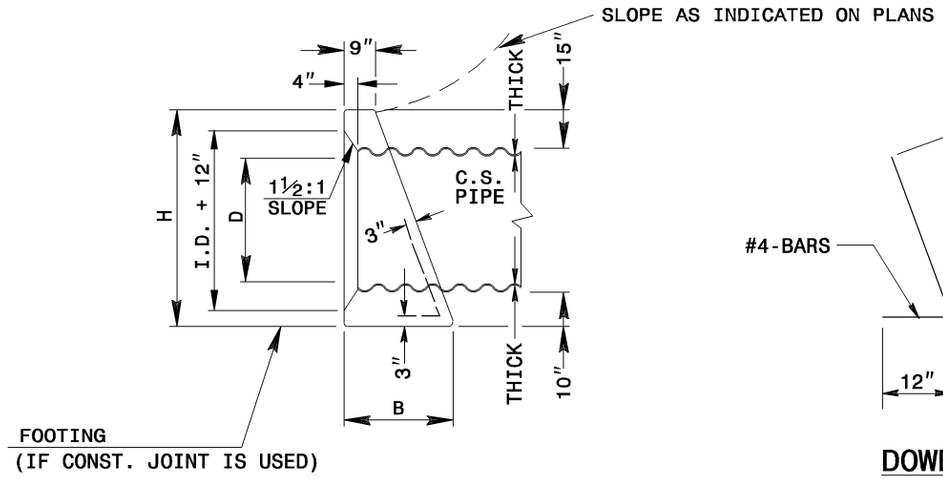

END ELEVATION

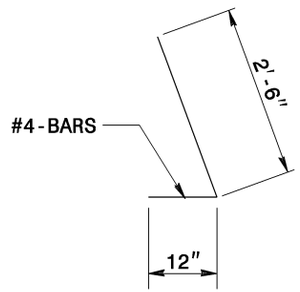

DOWEL

BAR-″X″

DOWELS IN ENDWALL WITH C. S. PIPE

LOC.	PIPE DIA.	SINGLE PIPE 15″	18″	24″	30″	36″	42″		48″		DOUBLE PIPE 15″	18″	24″	30″	36″	42″		48″	
	BARS	″X″	″X″	″X″	″X″	″X″	″X″	Y*	″X″	Y*	″X″	″X″	″X″	″X″	″X″	″X″	Y*	″X″	Y*
G	QTY.	2	2	3	3	4	4	2	5	2	2	2	3	3	4	4	2	5	2
M	QTY.	-	-	-	-	-	-		-		1	1	1	2	2	2		2	
G	QTY.	2	2	3	3	4	4		5		2	2	3	3	4	4		5	
TOTAL LBS.		9	9	14	14	19	53		62		12	12	16	19	23	73		85	

DIMENSIONS AND CONCRETE QUANTITIES

USING CORRUGATED STEEL PIPE

	COMMON			SINGLE PIPE		DOUBLE PIPE		
D	H	B	G	L	YD^3	M	L	YD^3
15″	3′-4″	1′-8″	2′-6″	5′-0″	0.7	1′-11″	6′-11″	1.0
18″	3′-7″	1′-10″	2′-11″	5′-10″	1.0	2′-3″	8′-1″	1.2
24″	4′-1″	2′-1″	3′-8″	7′-4″	1.4	3′-0″	10′-4″	1.9
30″	4′-7″	2′-4″	4′-5″	8′-10″	2.0	3′-9″	12′-7″	2.7
36″	5′-1″	2′-7″	5′-2″	10′-4″	2.8	4′-6″	14′-10″	3.8
42″	5′-7″	2′-10″	5′-11″	11′-10″	3.8	5′-3″	17′-1″	5.0
48″	6′-1″	3′-1″	6′-8″	13′-4″	4.9	6′-0″	19′-4″	7.5

*SEE SHEET 3

STATE OF
NORTH CAROLINA
DEPT. OF TRANSPORTATION
DIVISION OF HIGHWAYS
RALEIGH, N.C.

7-06

ENGLISH STANDARD DRAWING FOR

CONCRETE ENDWALL FOR SINGLE AND DOUBLE PIPE CULVERTS

15″ THRU 48″ PIPE - 90° SKEW

SHEET 2 OF 3

838.01