STATE OF
NORTH CAROLINA
DEPT. OF TRANSPORTATION
DIVISION OF HIGHWAYS
RALEIGH, N.C.

7-06

ENGLISH STANDARD DRAWING FOR

CONCRETE ENDWALL FOR SINGLE AND DOUBLE PIPE CULVERTS

17″ X 13″ THRU 71″ X 47″ PIPE ARCH 2 2/3″ X ½″ CORRUGATIONS - 90° SKEW

SHEET 1 OF 1

838.04

GENERAL NOTES:
- CHAMFER ALL CORNERS 1″. USE CLASS "B" CONCRETE.
- PLACE 2 #6 "Y" BARS IN THE TOP OF ALL ENDWALL FOR PIPE CULVERTS 42″ AND OVER WITH A MINIMUM OF 3″ COVER AND A LENGTH OF 6″ LESS THAN ENDWALL LENGTH.
- CONSTRUCT BOTTOM SLAB WITH FORMS.
- WHEN THE CONTRACTOR ELECTS TO USE A CONSTRUCTION JOINT AT THE BOTTOM OF THE PIPE, PLACE BAR "X" DOWELS IN THE BASE AS SHOWN ON PLANS. SPACE BARS APPROXIMATELY ON 12″ CENTERS UNLESS OTHERWISE DIRECTED BY THE ENGINEER.
- WHEN THE CONTRACTOR ELECTS TO USE A CONSTRUCTION JOINT AT THE BOTTOM OF THE PIPE AND POUR THE BASE SEPARATELY LEAVE THE POUR ROUGH.
- DO NOT INTERPRET WALL THICKNESS (T) SHOWN FOR THE THICKNESS ACCEPTABLE, BUT IS USED IN COMPUTING ENDWALL QUANTITIES.

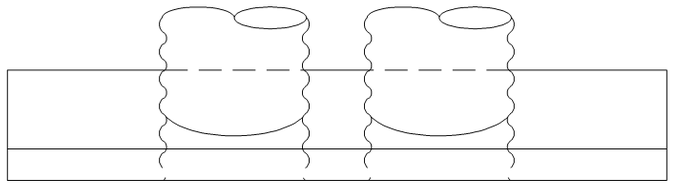

PLAN

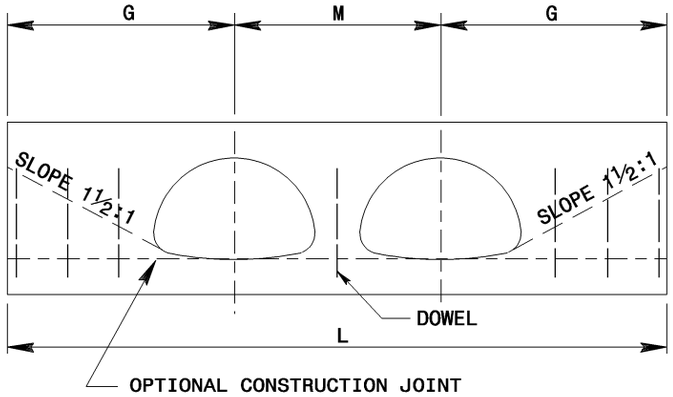

ELEVATION

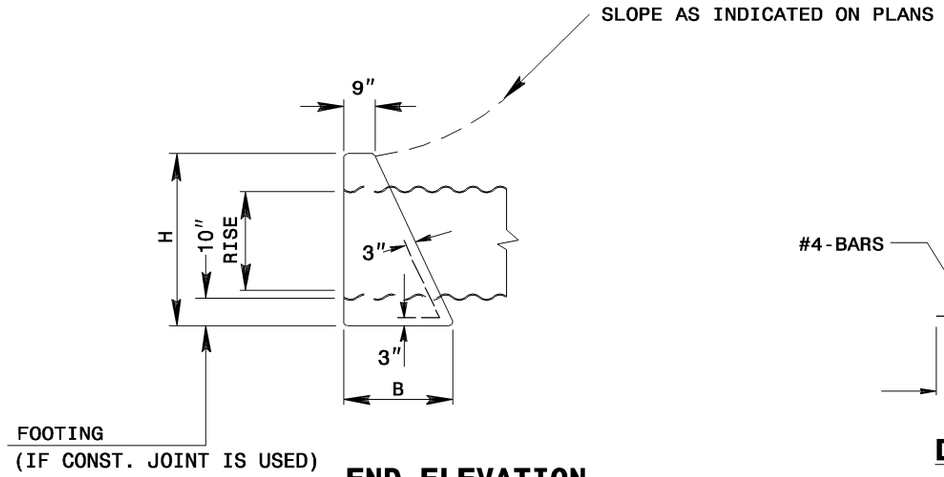

END ELEVATION

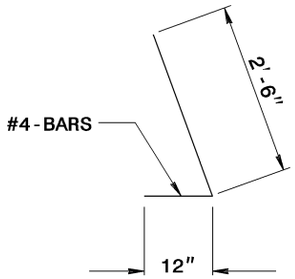

DOWEL

BAR-"X"

		DOWELS IN ENDWALL																			
LOC.	PIPE DIA.	SINGLE PIPE										DOUBLE PIPE									
		18″	22″	25″	29″	36″	43″	50″	58″	65″	72″	18″	22″	25″	29″	36″	43″	50″	58″	65″	72″
	BARS	"X"	"X"	"X"	"X"	"X"	"X"	"X"	"X"	"X"	"X"	"X"	"X"	"X"	"X"	"X"	"X"	"X"	"X"	"X"	"X"
G	QTY.	2	2	2	3	3	4	4	4	5	5	2	2	2	3	3	4	4	4	5	5
M	QTY.	-	-	-	-	-	-	-	-	-	-	1	1	1	1	1	1	2	2	2	2
G	QTY.	2	2	2	3	3	4	4	4	5	5	2	2	2	3	3	4	4	4	5	5
TOTAL LBS.		9	9	9	14	14	19	19	19	23	23	12	12	12	16	16	21	23	23	28	28

DIMENSIONS AND CONCRETE QUANTITIES										
COMMON DIMENSIONS USING C.S. PIPE ARCH							SINGLE PIPE		DOUBLE PIPE	
SPAN	RISE	THICK.	H	B	G	M	L	YD^3	L	YD^3
17″	13″	0.064	2′-9″	1′-5″	2′-7″	1′-11″	5′-2″	0.526	7′-0″	0.684
21″	15″	0.064	2′-11″	1′-6″	3′-0″	2′-4″	6′-0″	0.663	8′-4″	0.880
24″	18″	0.064	3′-2″	1′-7″	3′-5″	2′-8″	6′-10″	0.840	9′-6″	1.110
28″	20″	0.079	3′-4″	1′-8″	3′-9″	3′-1″	7′-5″	0.994	10′-6″	1.316
35″	24″	0.079	3′-8″	1′-10″	4′-6″	3′-11″	9′-0″	1.368	12′-11″	1.844
42″	29″	0.079	4′-1″	2′-1″	5′-4″	4′-8″	10′-8″	1.950	15′-4″	2.614
49″	33″	0.109	4′-5″	2′-3″	6′-0″	5′-5″	12′-0″	2.461	17′-5″	3.307
57″	38″	0.109	4′-10″	2′-6″	6′-10″	6′-4″	13′-8″	3.290	20′-0″	4.446
64″	43″	0.138	5′-3″	2′-8″	7′-8″	7′-1″	15′-4″	4.189	22′-5″	5.637
71″	47″	0.138	5′-7″	2′-10″	8′-4″	7′-11″	16′-8″	5.007	24′-7″	6.772

STATE OF
NORTH CAROLINA
DEPT. OF TRANSPORTATION
DIVISION OF HIGHWAYS
RALEIGH, N.C.

7-06

ENGLISH STANDARD DRAWING FOR

CONCRETE ENDWALL FOR SINGLE AND DOUBLE PIPE CULVERTS

17″ X 13″ THRU 71″ X 47″ PIPE ARCH 2 2/3″ X ½″ CORRUGATIONS - 90° SKEW

SHEET 1 OF 1

838.04