STATE OF
NORTH CAROLINA
DEPT. OF TRANSPORTATION
DIVISION OF HIGHWAYS
RALEIGH, N.C.

7-06

ENGLISH STANDARD DRAWING FOR

REINFORCED CONCRETE ENDWALL

FOR SINGLE 54" PIPE - 90° SKEW

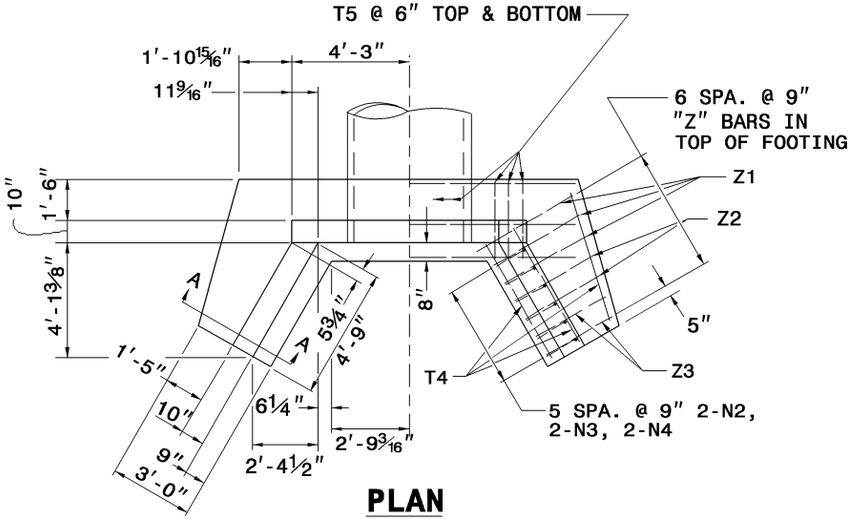

PLAN

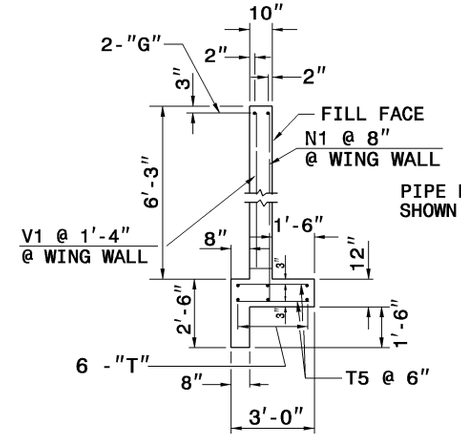

SECTION - BB

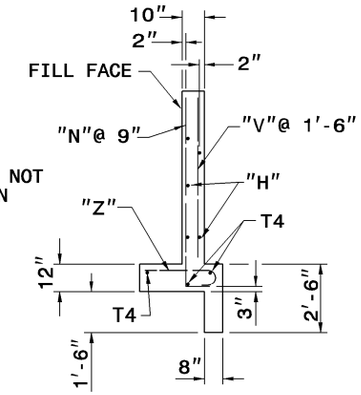

SECTION - AA

SEE STD. DWG. 838.45 FOR GENERAL NOTES.

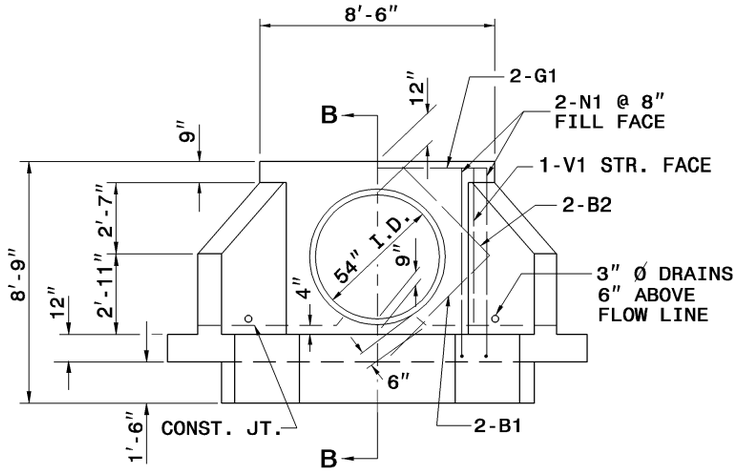

ELEVATION

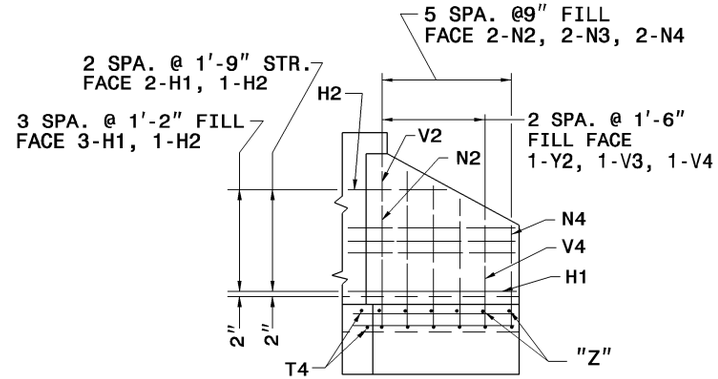

WING ELEVATION

BILL OF MATERIAL FOR ENDWALL				
REINF. STEEL			1 PIPE	
BAR	SIZE	LENGTH	NO.	WEIGHT
B1	#4	5'-6"	4	15
B2	#4	4'-6"	4	12
G1	#7	8'-2"	2	33
H1	#4	5'-6"	10	37
H2	#4	3'-6"	4	9
N1	#4	7'-11"	4	21
N2	#4	6'-7"	4	18
N3	#4	5'-8"	4	15
N4	#4	4'-9"	4	13
T1	#4	11'-10"	6	47
T4	#4	5'-3"	6	21
T5	#4	2'-6"	34	57
V1	#4	5'-9"	2	8
V2	#4	4'-10"	2	6
V3	#4	3'-11"	2	5
V4	#4	3'-1"	2	4
Z1	#4	3'-11"	6	16
Z2	#4	3'-6"	4	9
Z3	#4	3'-1"	4	8
REINF. STEEL LBS.				354
CON./R.C. CU. YDS			5.0	

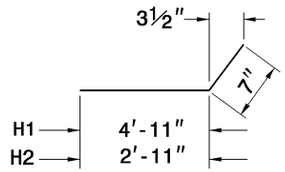

"H" BARS

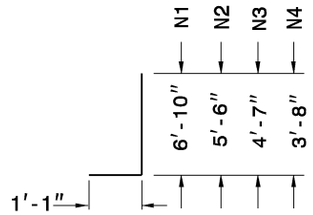

"N" BARS

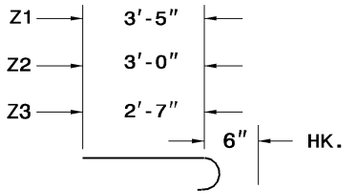

"Z" BARS

"H", "N", & "Z" BAR DIMENSIONS ARE OUT TO OUT.

SHEET 1 OF 2

838.21

STATE OF
NORTH CAROLINA
DEPT. OF TRANSPORTATION
DIVISION OF HIGHWAYS
RALEIGH, N.C.

7-06

ENGLISH STANDARD DRAWING FOR

REINFORCED CONCRETE ENDWALL

FOR SINGLE 54" PIPE - 90° SKEW

SHEET 1 OF 2

838.21