STATE OF NORTH CAROLINA
DEPT. OF TRANSPORTATION
DIVISION OF HIGHWAYS
RALEIGH, N.C.

7-06

ENGLISH STANDARD DRAWING FOR

REINFORCED CONCRETE ENDWALL

FOR DOUBLE & TRIPLE 54" PIPE - 90° SKEW

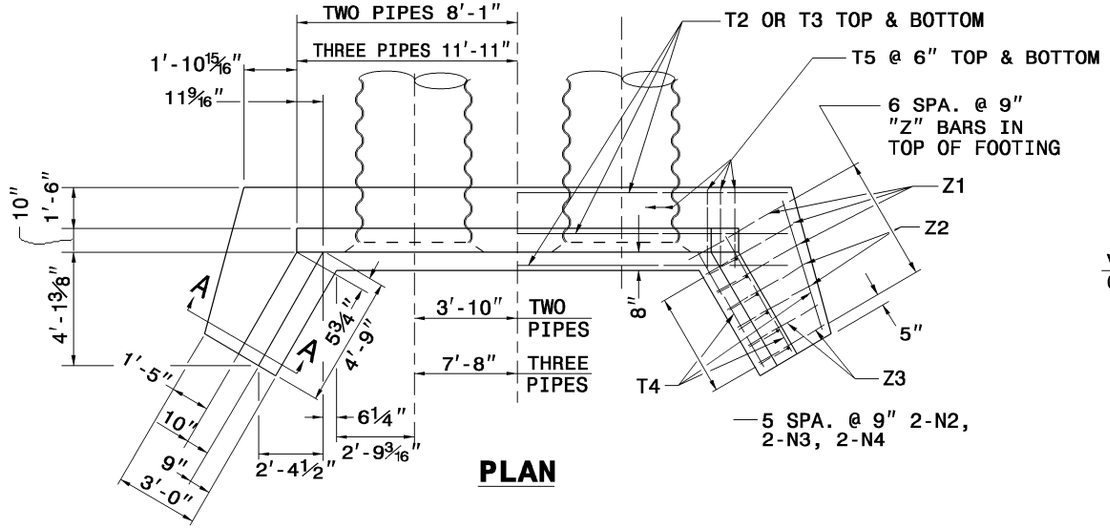

PLAN

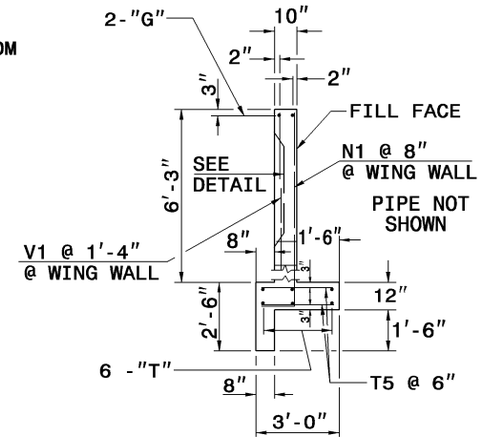

SECTION - BB

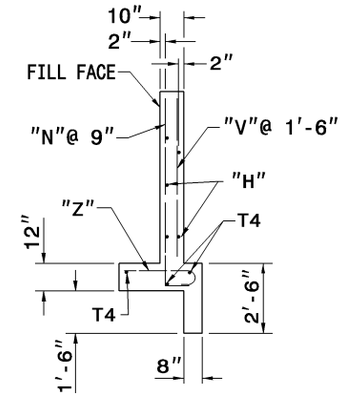

SECTION - AA

SEE STD. # 838.45 FOR GENERAL NOTES.

BILL OF MATERIAL FOR ENDWALL						
REINF. STEEL			2 PIPES		3 PIPES	
BAR	SIZE	LENGTH	NO.	WEIGHT	NO.	WEIGHT
B1	#4	5'-6"	8	29	12	44
B2	#4	4'-6"	4	12	4	12
B3	#4	6'-0"	4	16	8	32
G1	#7	8'-2"	-	-	-	-
G2	#7	15'-10"	2	65	-	-
G3	#7	23'-6"	-	-	2	96
H1	#4	5'-6"	10	37	10	37
H2	#4	3'-6"	4	9	4	9
N1	#4	7'-11"	8	42	12	63
N2	#4	6'-7"	4	18	4	18
N3	#4	5'-8"	4	15	4	15
N4	#4	4'-9"	4	13	4	13
T1	#4	11'-10"	-	-	-	-
T2	#4	19'-6"	6	78	-	-
T3	#4	27'-2"	-	-	6	109
T4	#4	5'-3"	6	21	6	21
T5	#4	2'-6"	64	107	96	160
V1	#4	5'-9"	4	15	6	23
V2	#4	4'-10"	2	6	2	6
V3	#4	3'-11"	2	5	2	5
V4	#4	3'-1"	2	4	2	4
Z1	#4	3'-11"	6	16	6	16
Z2	#4	3'-6"	4	9	4	9
Z3	#4	3'-1"	4	8	4	8
REINF. STEEL LBS.				525		700
CON./C.S. CU. YDS			7.3		9.4	

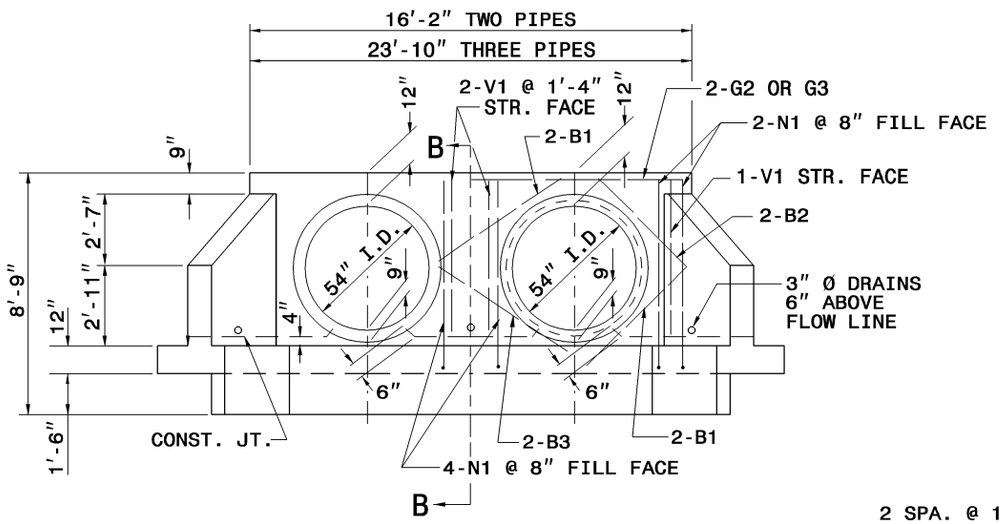

ELEVATION

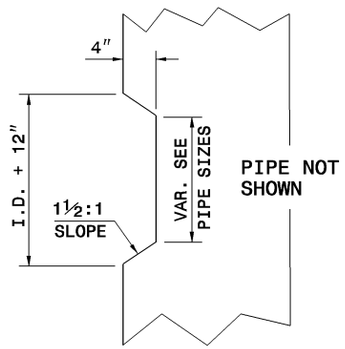

TAPER DETAIL

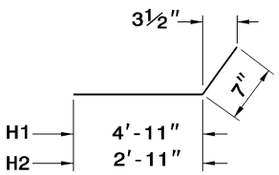

"H" BARS

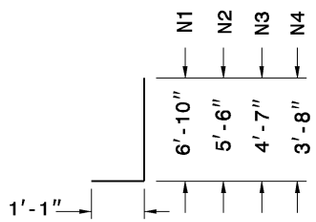

"N" BARS

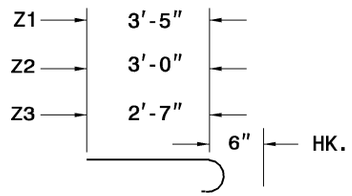

"Z" BARS

"H", "N", & "Z" BAR DIMENSIONS ARE OT TO OUT.

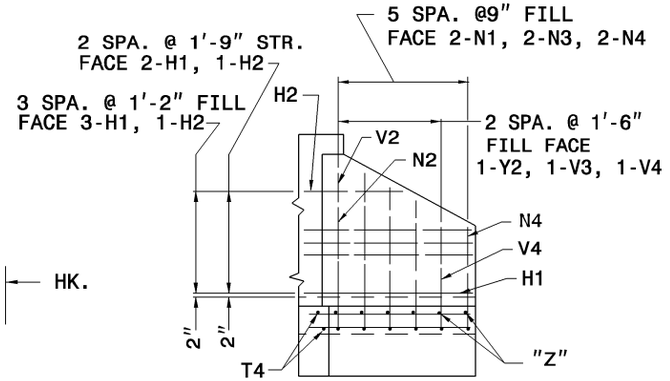

WING ELEVATION

STATE OF NORTH CAROLINA
DEPT. OF TRANSPORTATION
DIVISION OF HIGHWAYS
RALEIGH, N.C.

7-06

ENGLISH STANDARD DRAWING FOR

REINFORCED CONCRETE ENDWALL

FOR DOUBLE & TRIPLE 54" PIPE - 90° SKEW

SHEET 2 OF 2

838.22

SHEET 2 OF 2

838.22