STATE OF NORTH CAROLINA
DEPT. OF TRANSPORTATION
DIVISION OF HIGHWAYS
RALEIGH, N.C.

7-06

ENGLISH STANDARD DRAWING FOR

REINFORCED CONCRETE ENDWALL

FOR DOUBLE & TRIPLE 60" PIPE - 90° SKEW

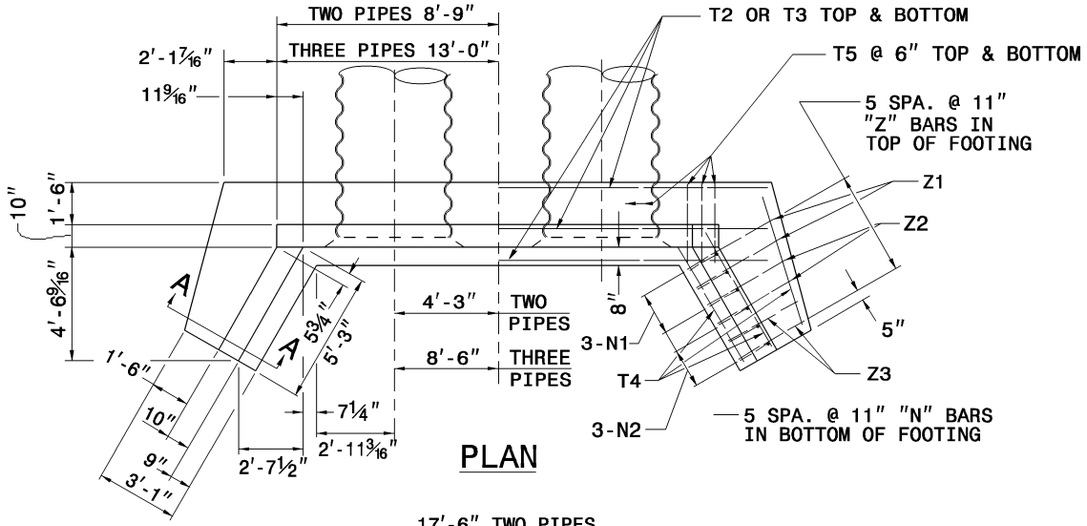

PLAN

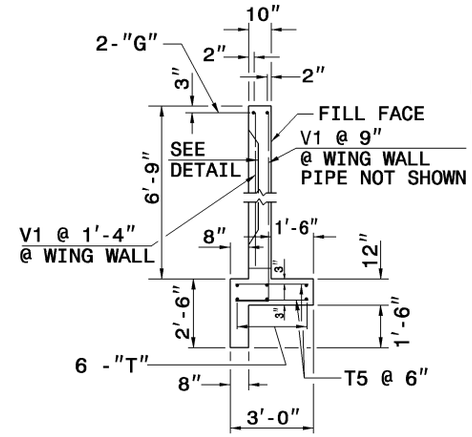

SECTION - BB

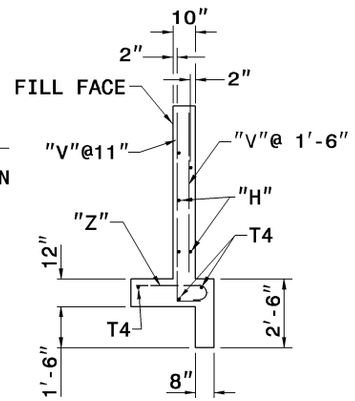

SECTION - AA

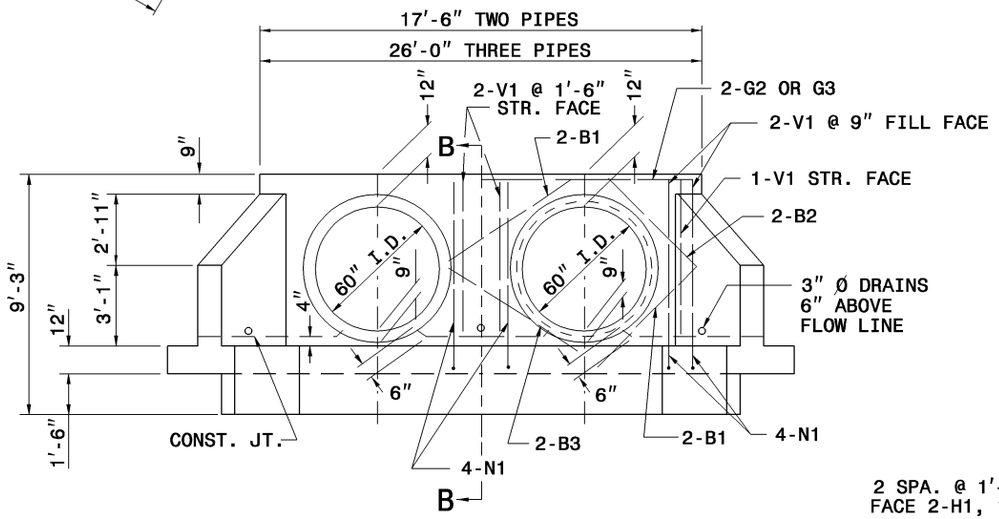

ELEVATION

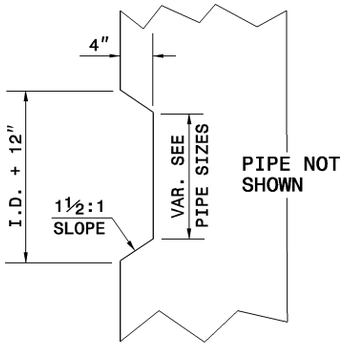

TAPER DETAIL

SEE STD. # 838.45 FOR GENERAL NOTES.

BILL OF MATERIAL FOR ENDWALL

REINF. STEEL			2 PIPES		3 PIPES	
BAR	SIZE	LENGTH	NO.	WEIGHT	NO.	WEIGHT
B1	#4	5'-6"	8	29	12	44
B2	#4	4'-6"	4	12	4	12
B3	#4	6'-6"	4	17	8	35
G2	#7	17'-2"	2	70	-	-
G3	#7	25'-8"	-	-	2	105
H1	#4	6'-0"	10	40	10	40
H2	#4	4'-0"	4	11	4	11
N1	#4	3'-11"	14	57	18	74
N2	#4	3'-5"	6	14	6	14
T1	#4	21'-2"	6	85	-	-
T2	#4	29'-8"			6	119
T4	#4	5'-6"	6	22	6	22
T5	#4	2'-6"	70	117	104	174
V1	#4	6'-3"	12	50	18	75
V2	#4	5'-1"	6	20	6	20
V3	#4	3'-11"	6	16	6	16
V4	#4	2'-9"	6	11	6	11
Z1	#5	4'-4"	4	18	4	18
Z2	#4	3'-10"	4	10	4	10
Z3	#4	3'-2"	4	8	4	8
REINF. STEEL LBS.				607		808
CON./C.S. CU. YDS			8.3		10.7	

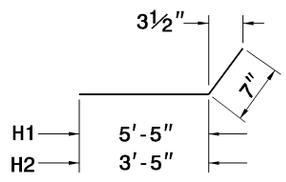

"H" BARS

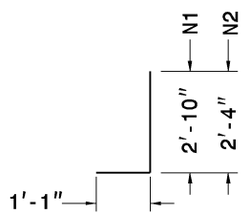

"N" BARS

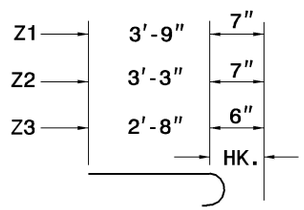

"Z" BARS

"H", "N", & "Z" BAR DIMENSIONS ARE OUT TO OUT.

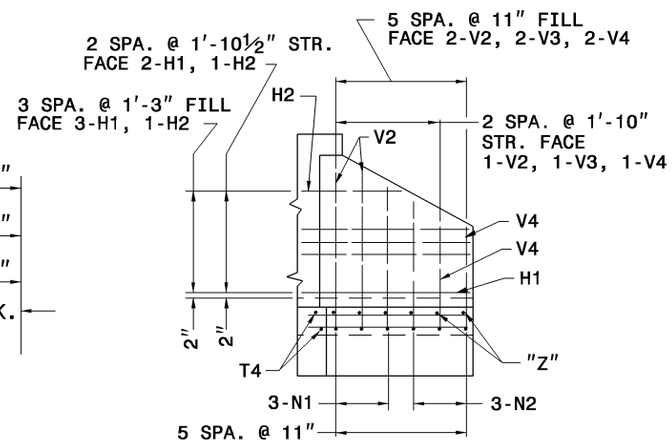

WING ELEVATION

STATE OF NORTH CAROLINA
DEPT. OF TRANSPORTATION
DIVISION OF HIGHWAYS
RALEIGH, N.C.

7-06

ENGLISH STANDARD DRAWING FOR

REINFORCED CONCRETE ENDWALL

FOR DOUBLE & TRIPLE 60" PIPE - 90° SKEW

SHEET 2 OF 2

838.28

SHEET 2 OF 2

838.28