STATE OF NORTH CAROLINA
DEPT. OF TRANSPORTATION
DIVISION OF HIGHWAYS
RALEIGH, N.C.

7-06

ENGLISH STANDARD DRAWING FOR

REINFORCED CONCRETE ENDWALL

FOR DOUBLE AND TRIPLE 72" PIPE 90° SKEW

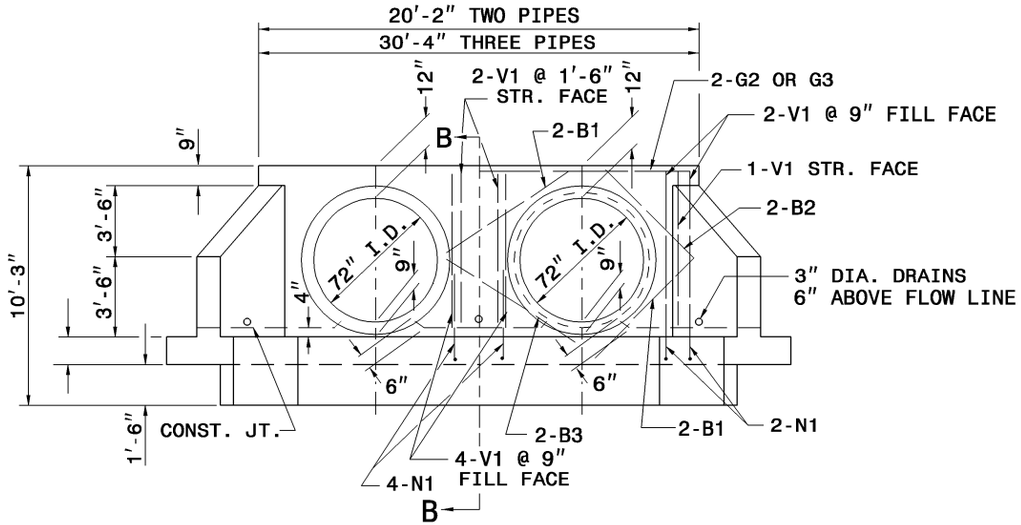

ELEVATION

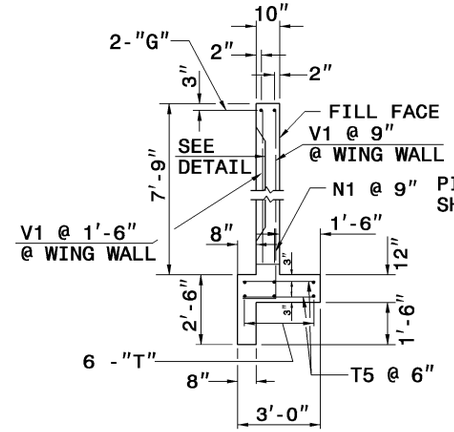

SECTION - BB

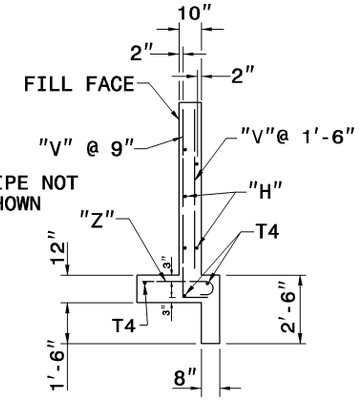

SECTION - AA

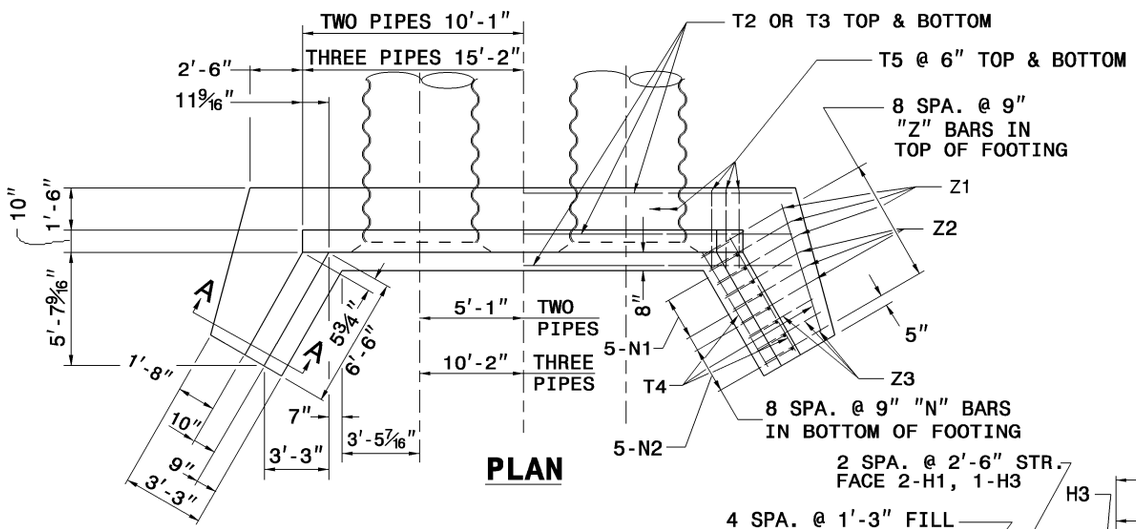

PLAN

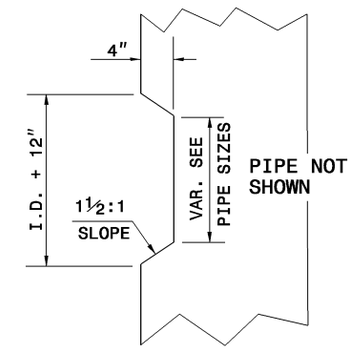

TAPER DETAIL

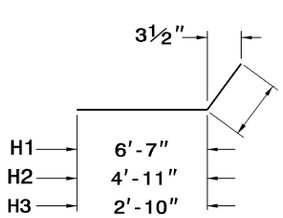

"H" BARS

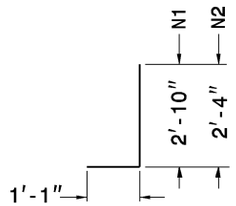

"N" BARS

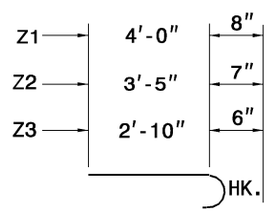

"Z" BARS

"H", "N", & "Z" BAR DIMENSIONS ARE OUT TO OUT.

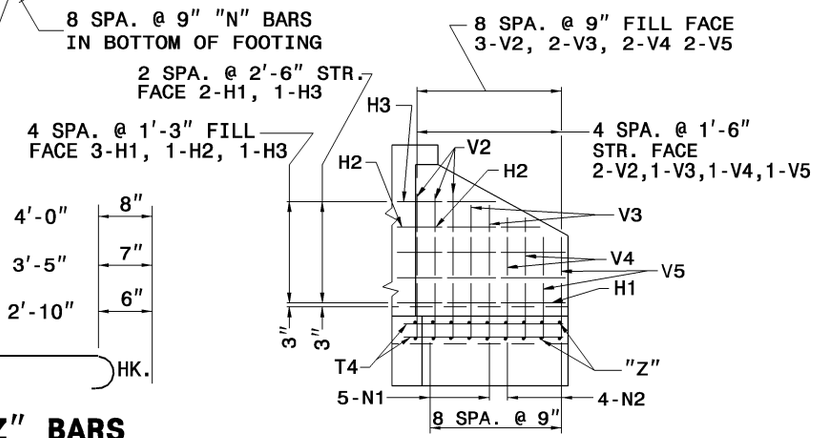

WING ELEVATION

SEE STD. # 838.45 FOR GENERAL NOTES.

BILL OF MATERIAL FOR ENDWALL

REINF. STEEL			2 PIPES		3 PIPES	
BAR	SIZE	LENGTH	NO.	WEIGHT	NO.	WEIGHT
B1	#4	5'-6"	8	29	12	44
B2	#4	4'-6"	4	12	4	12
B3	#4	7'-0"	4	19	8	37
G2	#7	19'-10"	2	81	-	-
G3	#7	30'-0"	-	-	2	123
H1	#4	7'-2"	10	48	10	48
H2	#4	5'-6"	2	7	2	7
H3	#4	3'-5"	4	9	4	9
N1	#5	3'-11"	18	74	22	90
N2	#4	3'-5"	8	18	8	18
T2	#4	24'-8"	6	99		
T3	#4	18'-1"			12	145
T4	#4	6'-9"	6	22	6	27
T5	#4	2'-6"	80	134	122	204
V1	#4	7'-3"	12	58	18	87
V2	#4	5'-10"	10	39	10	39
V3	#4	5'-0"	6	20	6	20
V4	#4	4'-1"	6	16	6	16
V5	#4	3'-2"	6	13	6	13
Z1	#6	4'-8"	6	42	6	42
Z2	#5	4'-0"	6	25	6	25
Z3	#4	3'-4"	6	13	6	13
REINF. STEEL LBS.				783		1019
CON./C.S. CU. YDS			10.5		13.6	

STATE OF NORTH CAROLINA
DEPT. OF TRANSPORTATION
DIVISION OF HIGHWAYS
RALEIGH, N.C.

7-06

ENGLISH STANDARD DRAWING FOR

REINFORCED CONCRETE ENDWALL

FOR DOUBLE AND TRIPLE 72" PIPE 90° SKEW