STATE OF NORTH CAROLINA
DEPT. OF TRANSPORTATION
DIVISION OF HIGHWAYS
RALEIGH, N.C.

7-06

ENGLISH STANDARD DRAWING FOR

REINFORCED BRICK ENDWALL

FOR DOUBLE AND TRIPLE 54" PIPES - 90° SKEW

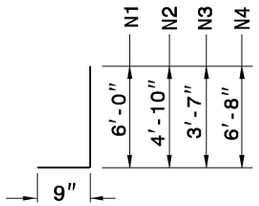

"N" BARS

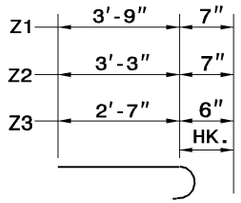

"Z" BARS

"N" & "Z" BAR DIMENSIONS ARE OUT TO OUT.

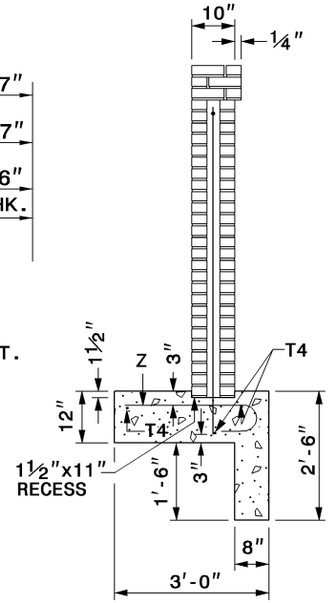

SECTION A-A

*PAY FOR CONCRETE AS BRICK MASONRY

BILL OF MATERIAL FOR ENDWALL						
REINF. STEEL			2 PIPES		3 PIPES	
BAR	SIZE	LENGTH	NO.	WEIGHT	NO.	WEIGHT
B1	#5	5'-3"	4	22	6	33
B2	#5	3'-9"	2	8	2	8
B3	#5	6'-0"	2	13	4	25
G2	#7	15'-4"	2	63	-	-
G3	#7	23'-0"	-	-	2	94
H1	#4	5'-3"	6	21	6	21
H2	#4	3'-6"	2	5	2	5
N1	#5	6'-9"	2	14	2	14
N2	#5	5'-7"	4	23	4	23
N3	#4	4'-4"	4	12	4	12
N4	#4	7'-5"	11	54	16	79
T2	#4	19'-8"	6	79	-	-
T3	#4	27'-4"	-	-	6	110
T4	#4	4'-11"	6	20	6	20
T5	#4	2'-6"	66	110	96	160
Z1	#5	4'-4"	4	18	4	18
Z2	#5	3'-10"	4	16	4	16
Z3	#4	3'-1"	4	8	4	8
REINF. STEEL LBS.				486		646
*CL. "A" CONC. FOOT. C.Y.				4.0		5.1
BR. MASONRY/C.S. C.Y.				3.5		4.5
BR. MASONRY/R.C. C.Y.				3.1		3.9

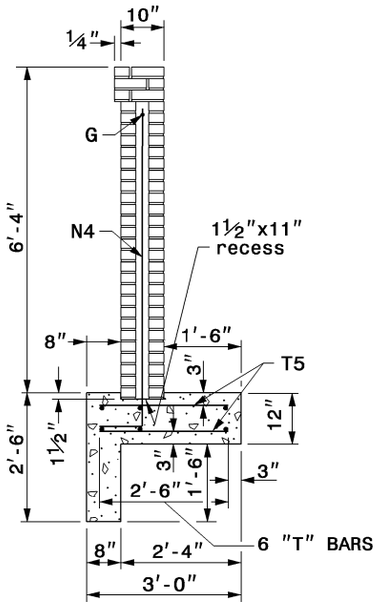

SECTION B-B

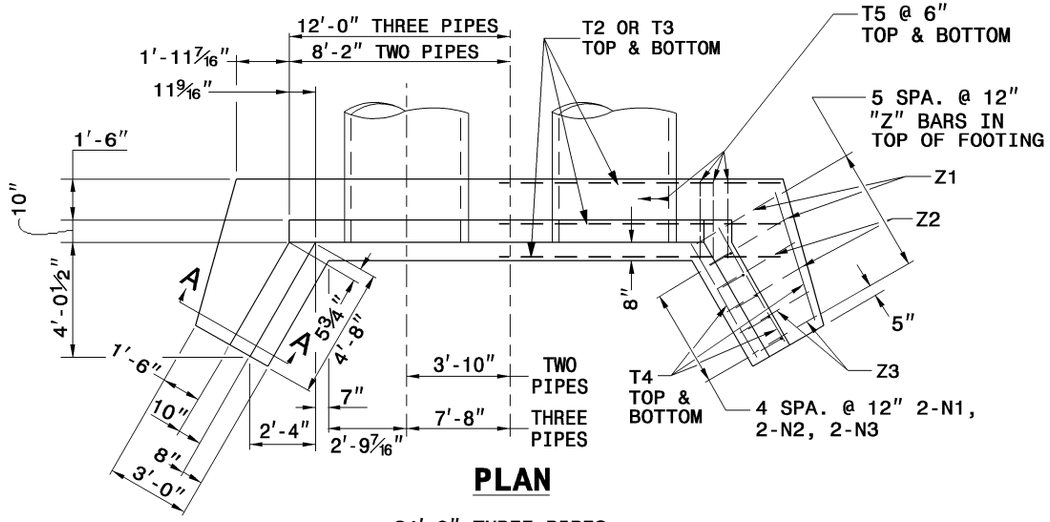

PLAN

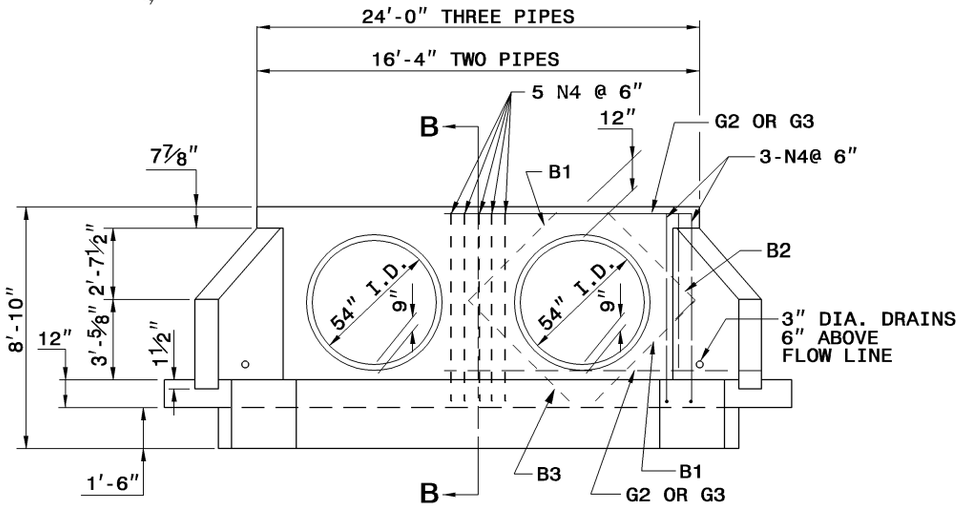

ELEVATION

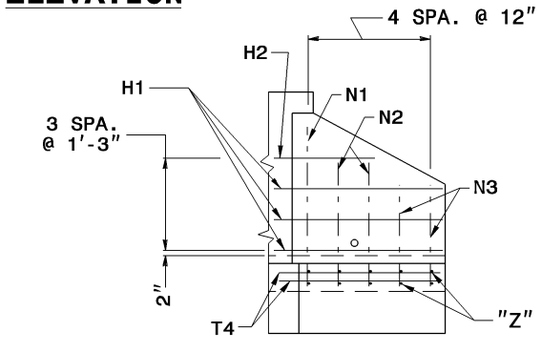

WING ELEVATION

SEE STD. DWG. NO. 838.75 FOR GENERAL NOTES.

STATE OF NORTH CAROLINA
DEPT. OF TRANSPORTATION
DIVISION OF HIGHWAYS
RALEIGH, N.C.

7-06

ENGLISH STANDARD DRAWING FOR

REINFORCED BRICK ENDWALL

FOR DOUBLE AND TRIPLE 54" PIPES - 90° SKEW

SHEET 1 OF 1
838.52