STATE OF
NORTH CAROLINA
DEPT. OF TRANSPORTATION
DIVISION OF HIGHWAYS
RALEIGH, N.C.

7-06

ENGLISH STANDARD DRAWING FOR

REINFORCED BRICK ENDWALL

FOR SINGLE 60" PIPE - 90° SKEW

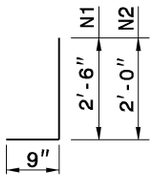

"N" BARS

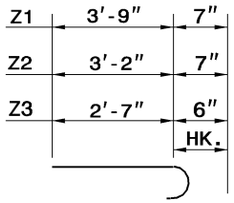

"Z" BARS

"N" & "Z" BAR DIMENSIONS ARE OUT TO OUT.

*PAY FOR CONCRETE AS BRICK MASONRY

BILL OF MATERIAL FOR ENDWALL				
REINF. STEEL			1 PIPE	
BAR	SIZE	LENGTH	NO.	WEIGHT
B1	#5	5'-3"	2	11
B2	#5	3'-9"	2	8
G1	#7	8'-0"	2	33
H1	#4	5'-9"	6	23
H2	#4	4'-0"	2	5
H3	#4	2'-1"	2	3
N1	#5	3'-3"	12	41
N2	#4	2'-9"	6	11
T1	#4	13'-0"	6	52
T4	#4	5'-8"	6	23
T5	#4	2'-6"	36	60
V1	#4	6'-4"	6	25
V2	#4	5'-2"	4	14
V3	#4	3'-11"	4	10
V4	#4	2'-9"	4	7
Z1	#5	4'-4"	6	27
Z2	#5	3'-9"	4	16
Z3	#5	3'-1"	4	8
REINF. STEEL LBS.				377
*CL. "A" CONC. FOOT. C.Y.			3.1	
BR. MASONRY/C.S. C.Y.			2.8	
BR. MASONRY/R.C. C.Y.			2.6	

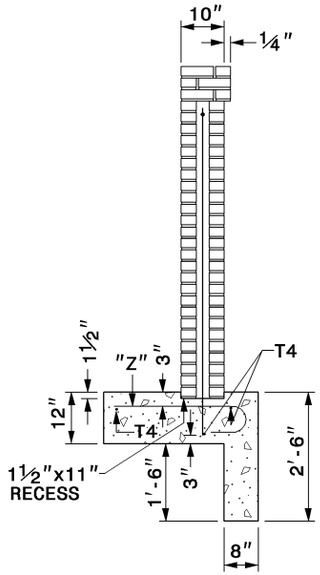

SECTION A-A

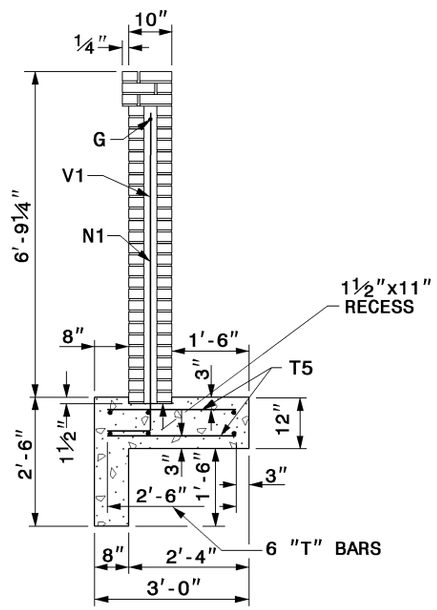

SECTION B-B

SEE STD. DWG. NO. 838.75 FOR GENERAL NOTES.

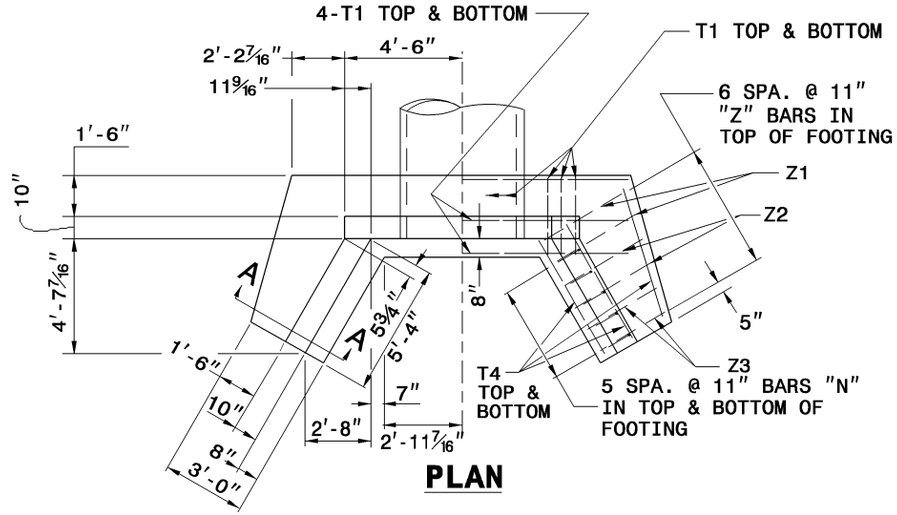

PLAN

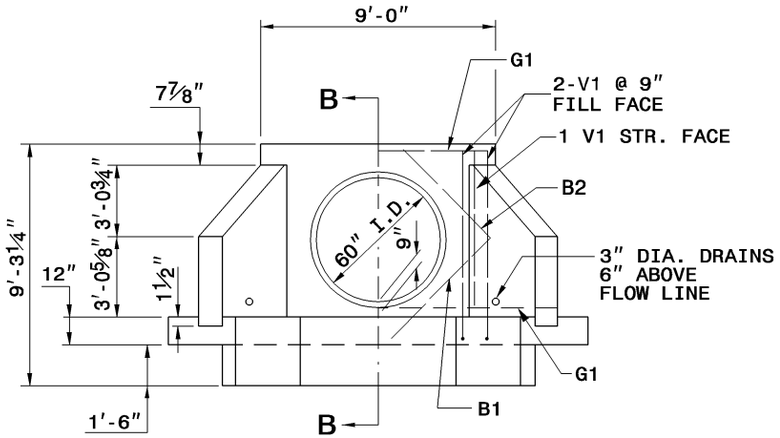

ELEVATION

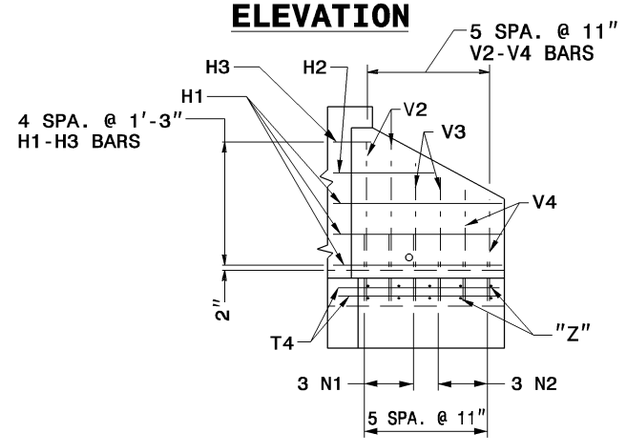

WING ELEVATION

STATE OF
NORTH CAROLINA
DEPT. OF TRANSPORTATION
DIVISION OF HIGHWAYS
RALEIGH, N.C.

7-06

ENGLISH STANDARD DRAWING FOR

REINFORCED BRICK ENDWALL

FOR SINGLE 60" PIPE - 90° SKEW

SHEET 1 OF 1

838.57

SHEET 1 OF 1

838.57