STATE OF NORTH CAROLINA
DEPT. OF TRANSPORTATION
DIVISION OF HIGHWAYS
RALEIGH, N.C.

7-06

ENGLISH STANDARD DRAWING FOR

REINFORCED BRICK ENDWALL

FOR DOUBLE AND TRIPLE 60" PIPES - 90° SKEW

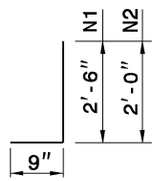

"N" BARS

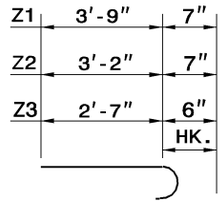

"Z" BARS

"N" & "Z" BAR DIMENSIONS ARE OUT TO OUT.

*PAY FOR CONCRETE AS BRICK MASONRY

BILL OF MATERIAL FOR ENDWALL						
REINF. STEEL			2 PIPES		3 PIPES	
BAR	SIZE	LENGTH	NO.	WEIGHT	NO.	WEIGHT
B1	#5	5'-3"	4	22	6	33
B2	#5	3'-9"	2	8	2	8
B3	#5	6'-3"	2	13	4	26
G2	#7	16'-8"	2	68	-	-
G3	#7	25'-4"	-	-	2	104
H1	#4	5'-9"	6	23	6	23
H2	#4	4'-0"	2	5	2	5
H3	#4	2'-1"	2	3	2	3
N1	#5	3'-3"	17	58	22	75
N2	#4	2'-9"	6	11	6	11
T2	#4	21'-8"	6	87	-	-
T3	#4	15'-10"	-	-	12	127
T4	#4	5'-8"	6	23	6	23
T5	#4	2'-6"	70	117	106	177
V1	#4	6'-4"	11	47	16	68
V2	#4	5'-2"	4	14	4	14
V3	#4	3'-11"	4	10	4	10
V4	#4	2'-9"	4	7	4	7
Z1	#5	4'-4"	6	27	6	27
Z2	#5	3'-9"	4	16	4	16
Z3	#4	3'-1"	4	8	4	8
REINF. STEEL LBS.				567		765
*CL. "A" CONC. FOOT. C.Y.				4.4		5.6
BR. MASONRY/C.S. C.Y.				4.0		5.3
BR. MASONRY/R.C. C.Y.				3.5		4.5

SEE STD. DWG. NO. 838.75 FOR GENERAL NOTES.

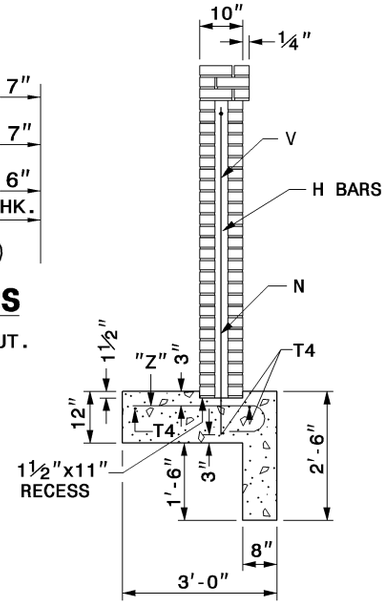

SECTION A-A

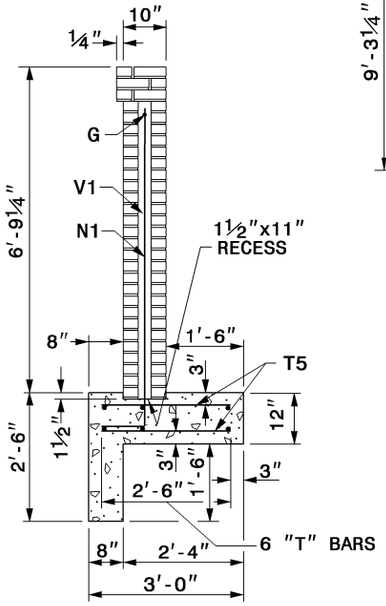

SECTION B-B

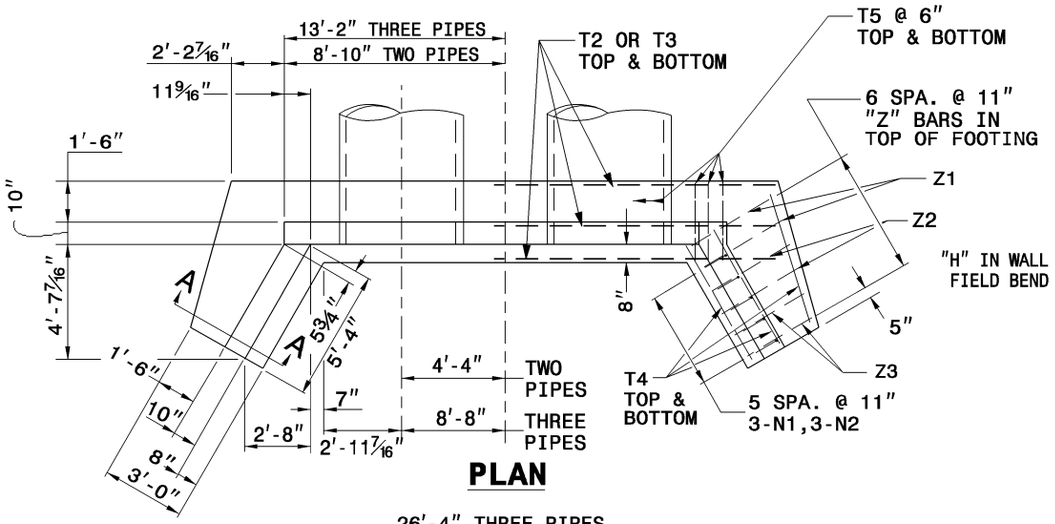

PLAN

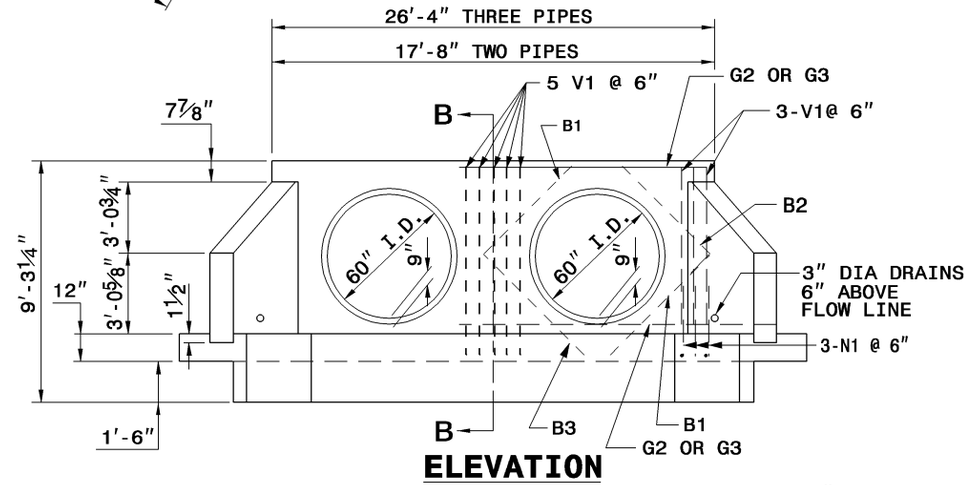

ELEVATION

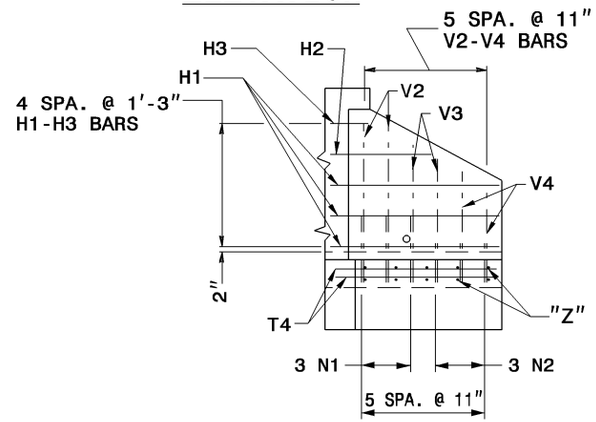

WING ELEVATION

STATE OF NORTH CAROLINA
DEPT. OF TRANSPORTATION
DIVISION OF HIGHWAYS
RALEIGH, N.C.

7-06

ENGLISH STANDARD DRAWING FOR

REINFORCED BRICK ENDWALL

FOR DOUBLE AND TRIPLE 60" PIPES - 90° SKEW

SHEET 1 OF 1

838.58

SHEET 1 OF 1

838.58