STATE OF NORTH CAROLINA
DEPT. OF TRANSPORTATION
DIVISION OF HIGHWAYS
RALEIGH, N.C.

7-06

ENGLISH STANDARD DRAWING FOR

REINFORCED BRICK ENDWALL

FOR DOUBLE AND TRIPLE 66" PIPES - 90° SKEW

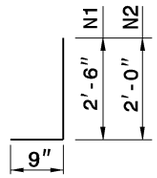

"N" BARS

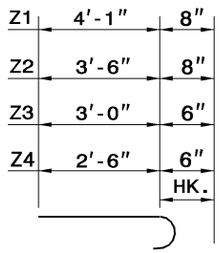

"Z" BARS

"N" & "Z" BAR DIMENSIONS ARE OUT TO OUT.

*PAY FOR CONCRETE AS BRICK MASONRY

BILL OF MATERIAL FOR ENDWALL						
REINF. STEEL			2 PIPES		3 PIPES	
BAR	SIZE	LENGTH	NO.	WEIGHT	NO.	WEIGHT
B1	#5	5'-3"	4	22	6	33
B2	#5	4'-0"	2	8	2	8
B3	#5	7'-0"	2	15	4	29
G2	#7	18'-0"	2	74	-	-
G3	#7	27'-4"	-	-	2	112
H1	#4	6'-3"	6	25	6	25
H2	#4	5'-0"	2	7	2	7
H3	#4	3'-0"	2	4	2	4
N1	#5	3'-3"	19	64	24	81
N2	#4	2'-9"	6	11	6	11
T2	#4	23'-2"	6	93	-	-
T3	#4	16'-11"	-	-	12	136
T4	#4	5'-9"	6	23	6	23
T5	#4	2'-6"	76	127	112	187
V1	#4	6'-11"	11	51	16	74
V2	#4	6'-2"	2	8	2	8
V3	#4	5'-3"	4	14	4	14
V4	#4	4'-2"	4	11	4	11
V5	#4	3'-2"	4	8	4	8
Z1	#6	4'-9"	6	43	6	43
Z2	#6	4'-2"	4	25	4	25
Z3	#4	3'-6"	4	9	4	9
Z4	#4	3'-3"	2	4	2	4
REINF. STEEL LBS.				646		852
*CL. "A" CONC. FOOT. C.Y.				4.8		6.1
BR. MASONRY/C.S. C.Y.				4.5		5.9
BR. MASONRY/R.C. C.Y.				3.9		5.0

SEE STD. DWG. NO. 838.75 FOR GENERAL NOTES.

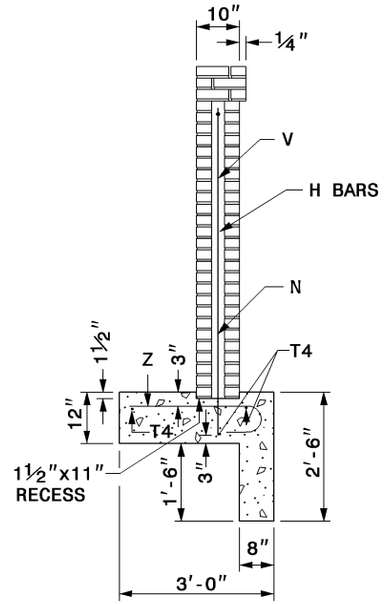

SECTION A-A

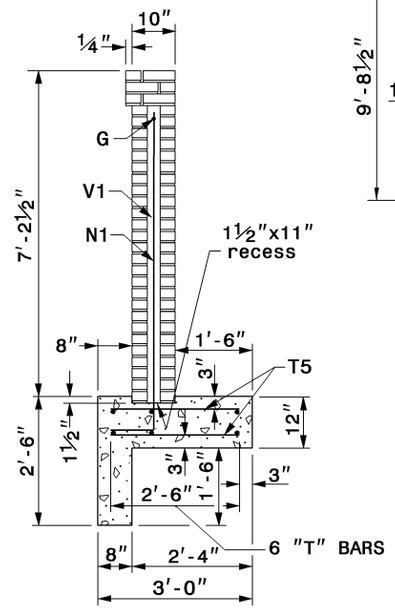

SECTION B-B

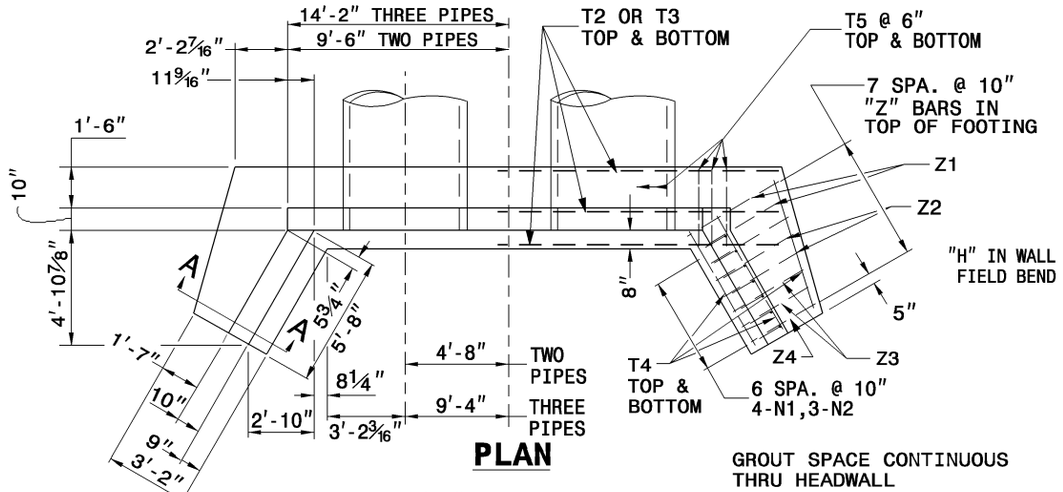

PLAN

GROUT SPACE CONTINUOUS THRU HEADWALL

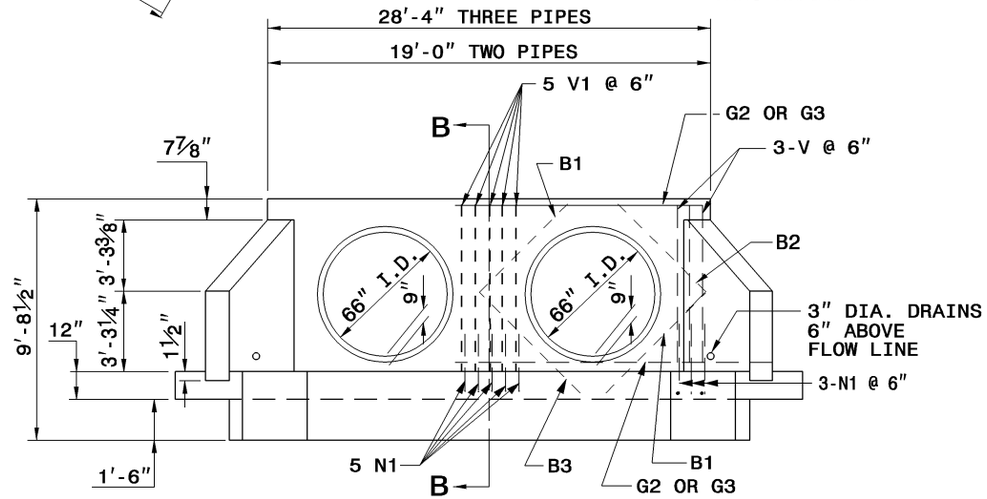

ELEVATION

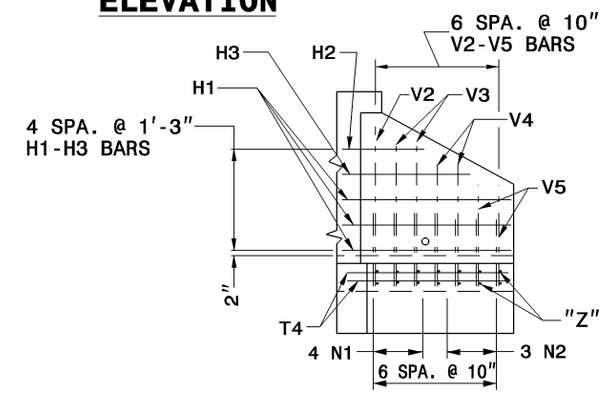

WING ELEVATION

STATE OF NORTH CAROLINA
DEPT. OF TRANSPORTATION
DIVISION OF HIGHWAYS
RALEIGH, N.C.

7-06

ENGLISH STANDARD DRAWING FOR

REINFORCED BRICK ENDWALL

FOR DOUBLE AND TRIPLE 66" PIPES - 90° SKEW

SHEET 1 OF 1

838.64

SHEET 1 OF 1

838.64