STATE OF NORTH CAROLINA
DEPT. OF TRANSPORTATION
DIVISION OF HIGHWAYS
RALEIGH, N.C.

7-06

ENGLISH STANDARD DRAWING FOR

REINFORCED BRICK ENDWALL

FOR DOUBLE AND TRIPLE 72" PIPES - 90° SKEW

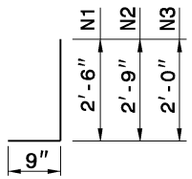

"N" BARS

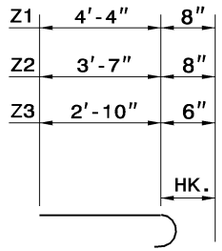

"Z" BARS

"N" & "Z" BAR DIMENSIONS ARE OUT TO OUT.

*PAY FOR CONCRETE AS BRICK MASONRY

BILL OF MATERIAL FOR ENDWALL						
REINF. STEEL			2 PIPES		3 PIPES	
BAR	SIZE	LENGTH	NO.	WEIGHT	NO.	WEIGHT
B1	#5	5'-6"	4	23	6	34
B2	#5	4'-3"	2	9	2	9
B3	#5	7'-3"	2	15	4	30
G2	#7	19'-4"	2	79	-	-
G3	#7	29'-8"	-	-	2	121
H1	#4	6'-9"	6	27	6	27
H2	#4	5'-8"	2	8	2	8
H3	#4	3'-8"	2	5	2	5
N1	#5	3'-3"	11	37	16	54
N2	#6	3'-6"	8	42	8	42
N3	#4	2'-9"	8	15	8	15
T2	#4	25'-0"	6	100	-	-
T3	#4	18'-4"	-	-	12	147
T4	#4	6'-6"	6	26	6	26
T5	#4	2'-6"	82	137	122	204
V1	#4	7'-6"	11	55	16	80
V2	#4	6'-7"	4	18	4	18
V3	#4	5'-6"	4	15	4	15
V4	#4	4'-6"	4	12	4	12
V5	#4	3'-5"	4	9	4	9
Z1	#6	5'-0"	6	45	6	45
Z2	#6	4'-3"	6	38	6	38
Z3	#4	3'-4"	6	13	6	13
REINF. STEEL LBS.				728		952
*CL. "A" CONC. FOOT. C.Y.				5.3		6.8
BR. MASONRY/C.S. C.Y.				5.3		7.0
BR. MASONRY/R.C. C.Y.				4.6		5.9

SEE STD. DWG. NO. 838.75 FOR GENERAL NOTES.

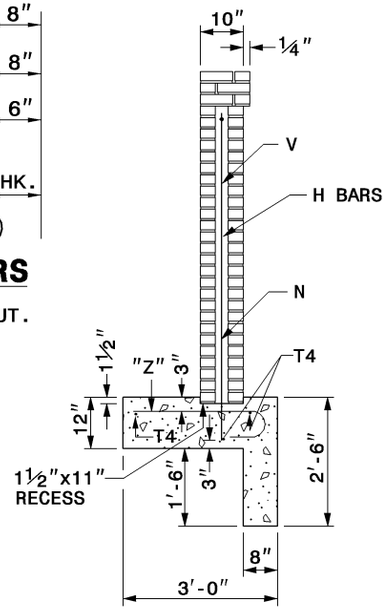

SECTION A-A

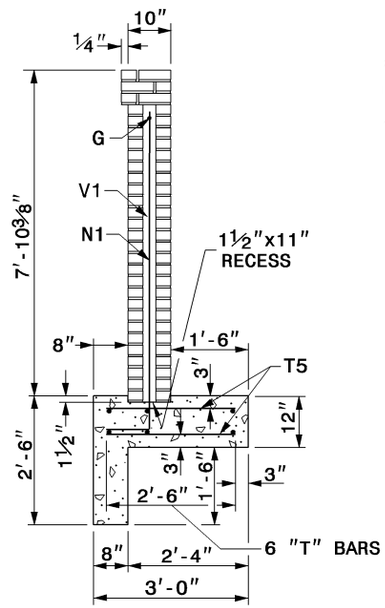

SECTION B-B

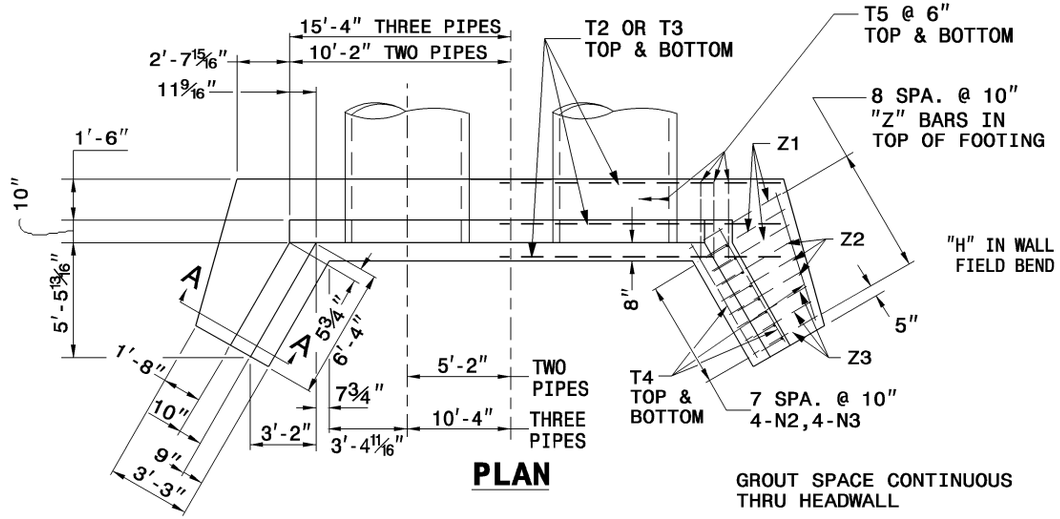

PLAN

GROUT SPACE CONTINUOUS
THRU HEADWALL

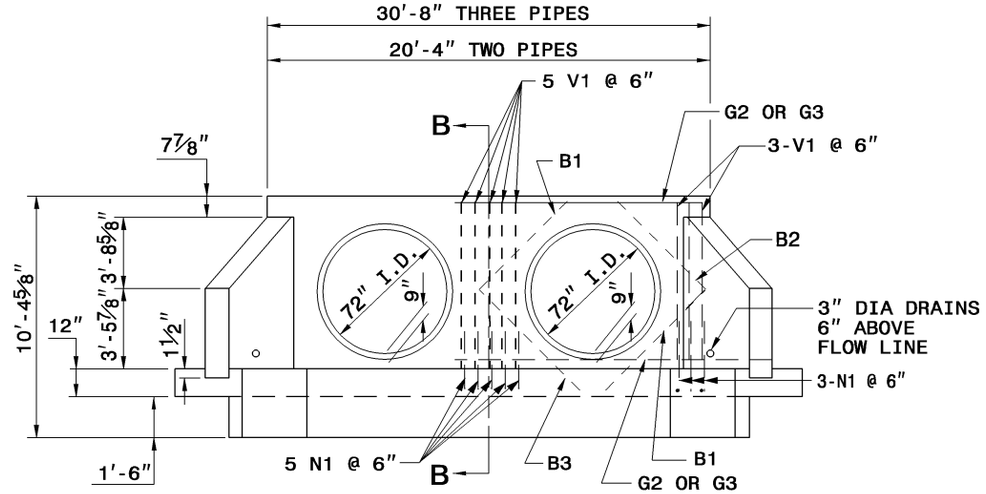

ELEVATION

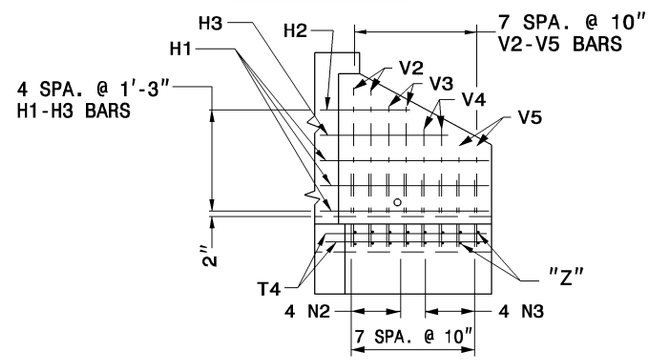

WING ELEVATION

STATE OF NORTH CAROLINA
DEPT. OF TRANSPORTATION
DIVISION OF HIGHWAYS
RALEIGH, N.C.

7-06

ENGLISH STANDARD DRAWING FOR

REINFORCED BRICK ENDWALL

FOR DOUBLE AND TRIPLE 72" PIPES - 90° SKEW

SHEET 1 OF 1

838.70

SHEET 1 OF 1

838.70