STATE OF
NORTH CAROLINA
DEPT. OF TRANSPORTATION
DIVISION OF HIGHWAYS
RALEIGH, N.C.

7-06

ENGLISH STANDARD DRAWING FOR

CONCRETE BASE PAD FOR DRAINAGE STRUCTURES

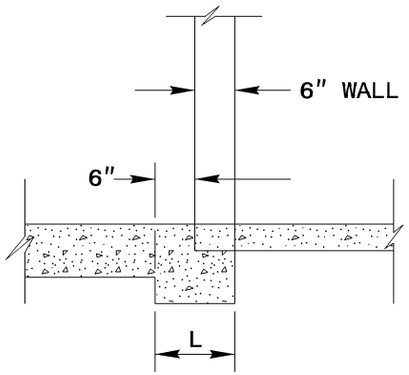

PART SECTION
6" WALL

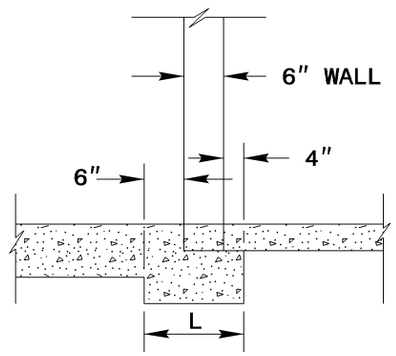

PART SECTION
6" WALL WITH 4" LIP

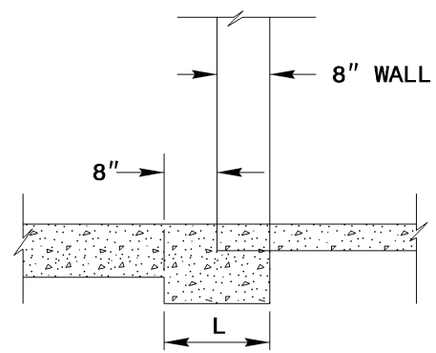

PART SECTION
8" WALL

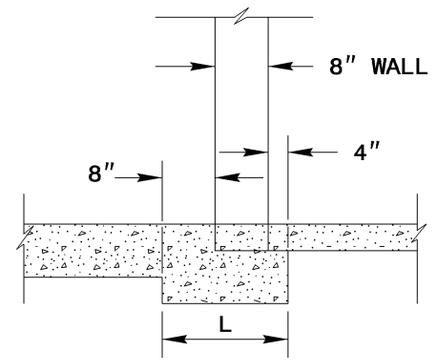

PART SECTION
8" WALL WITH 4" LIP

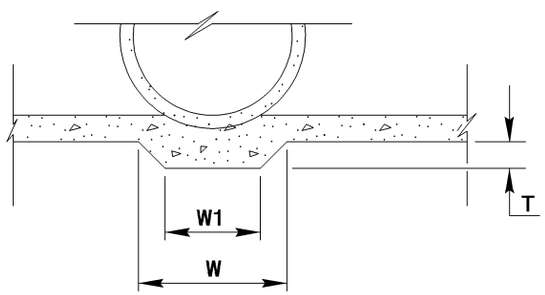

PART SECTION
OF END ELEVATION

TABLES OF QUANTITIES FOR PIPE SET IN PAD

PIPE D	"W" DIM	"W1" DIM	"T" DIM	C.Y. QUANTITIES WHEN L IS 12"	16"	20"
12"	1'-1⅞"	0'-7⅞"	0'-2"	0.005	0.007	0.008
15"	1'-3⅝"	0'-9⅛"	0'-2"	0.006	0.008	0.010
18"	1'-5¼"	0'-10⅜"	0'-2"	0.007	0.010	0.012
24"	1'-8¾"	1'-0⅛"	0'-3"	0.011	0.014	0.018
30"	2'-0¼"	1'-2¾"	0'-3½"	0.014	0.018	0.023
36"	2'-3¾"	1'-5⅜"	0'-4"	0.017	0.023	0.025
42"	2'-7⅛"	1'-7"	0'-5¼"	0.025	0.030	0.038
48"	2'-10⅝"	1'-8¾"	0'-5¾"	0.028	0.038	0.047
54"	3'-2⅛"	1'-10½"	0'-6¼"	0.035	0.047	0.058
60"	3'-5⅝"	2'-0¼"	0'-6¾"	0.042	0.056	0.071
66"	3'-9"	2'-2¼"	0'-7¼"	0.050	0.067	0.084
72"	4'-0½"	2'-3¾"	0'-7¾"	0.059	0.078	0.098

GENERAL NOTES:

USE THIS STANDARD WITH ALL DRAINAGE STRUCTURES USING REINFORCED CONCRETE PIPE SET IN BASE SLAB.

SHEET 1 OF 1

840.00

STATE OF
NORTH CAROLINA
DEPT. OF TRANSPORTATION
DIVISION OF HIGHWAYS
RALEIGH, N.C.

7-06

ENGLISH STANDARD DRAWING FOR
CONCRETE BASE PAD
FOR DRAINAGE STRUCTURES

SHEET 1 OF 1

840.00