STATE OF
NORTH CAROLINA
DEPT. OF TRANSPORTATION
DIVISION OF HIGHWAYS
RALEIGH, N.C.

7-06

ENGLISH STANDARD DRAWING FOR
**FRAME, GRATES, AND HOOD**
FOR USE ON STANDARD CATCH BASIN

NOTE: USE TYPE "E", "F" AND "G" GRATE UNLESS OTHERWISE NOTED.

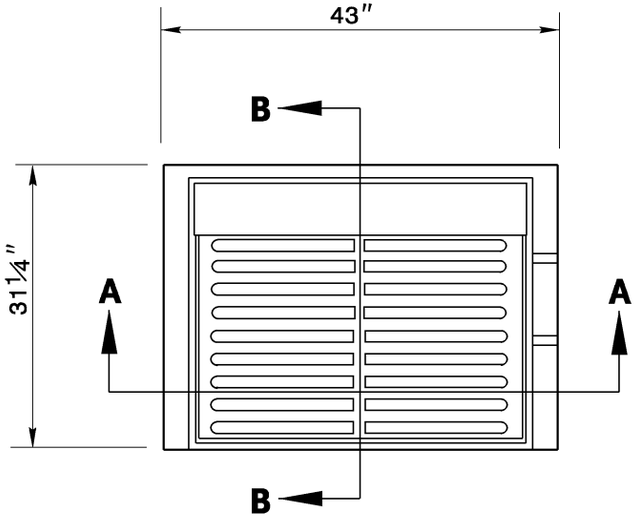


PLAN

FRAME,GRATE, & HOOD ASS'Y

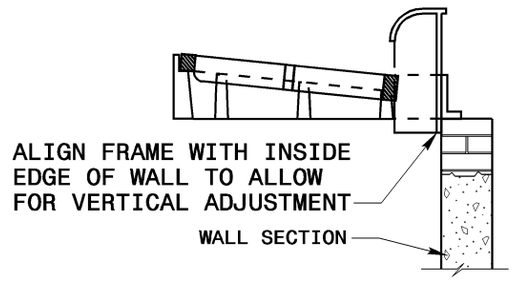


SECTION - BB

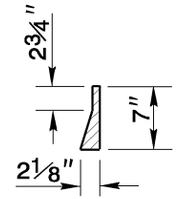


SECTION - LL

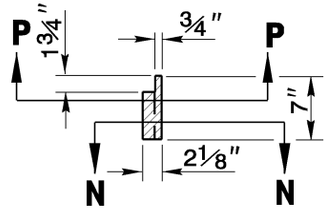


SECTION - MM

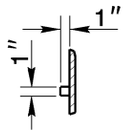


SECTION - PP

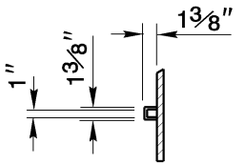


SECTION - NN

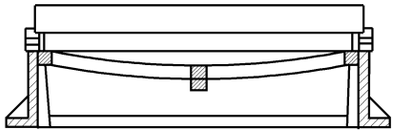

SECTION - AA

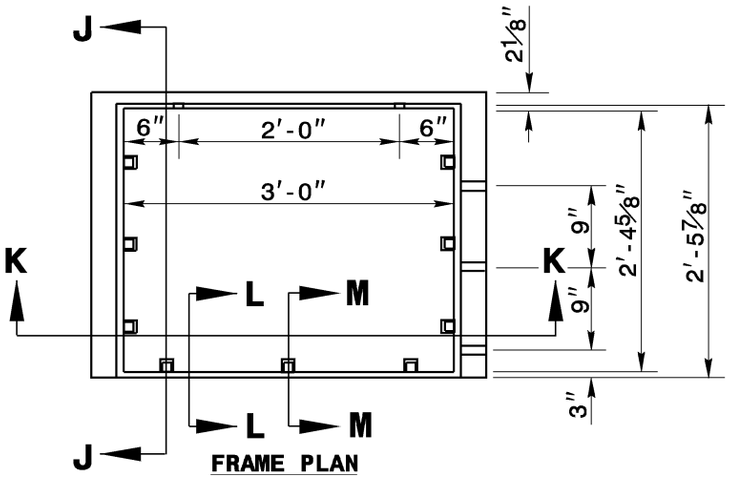


FRAME PLAN

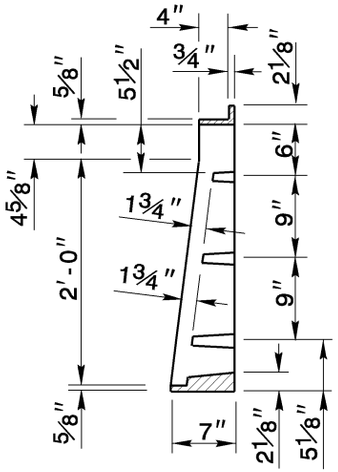


SECTION - JJ

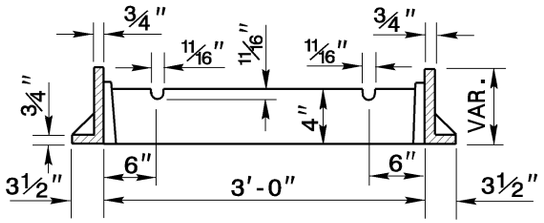


SECTION - KK

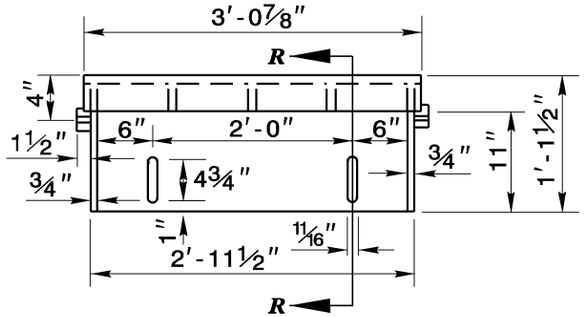


HOOD ELEVATION

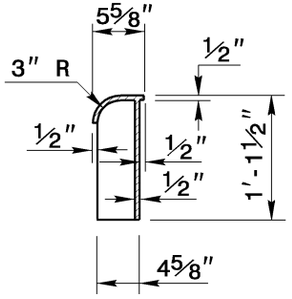


SECTION - RR

SHEET 1 OF 2

840.03

STATE OF
NORTH CAROLINA
DEPT. OF TRANSPORTATION
DIVISION OF HIGHWAYS
RALEIGH, N.C.

7-06

ENGLISH STANDARD DRAWING FOR
**FRAME, GRATES, AND HOOD**
FOR USE ON STANDARD CATCH BASIN

SHEET 1 OF 2

840.03