STATE OF
NORTH CAROLINA
DEPT. OF TRANSPORTATION
DIVISION OF HIGHWAYS
RALEIGH, N.C.

7-06

ENGLISH STANDARD DRAWING FOR

CONCRETE OPEN THROAT CATCH BASIN

12" THRU 48" PIPE

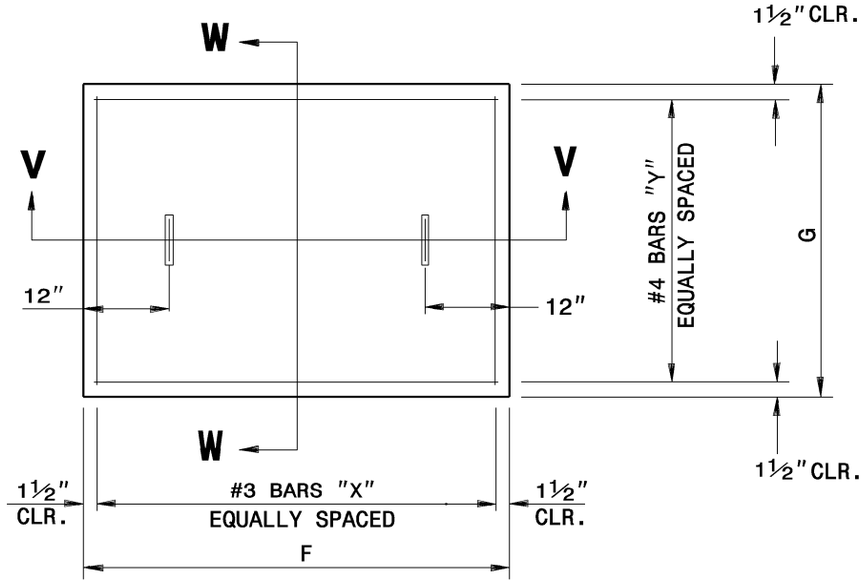

PLAN

PRECAST OR CAST IN PLACE TOP SLAB

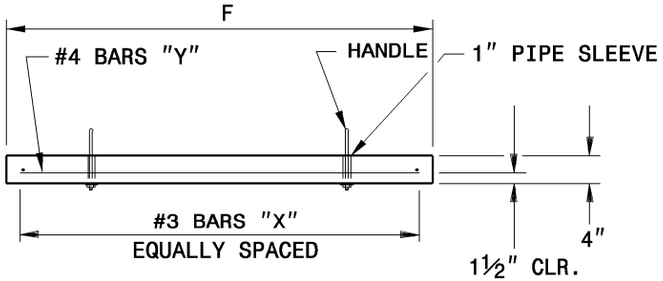

SECTION V-V

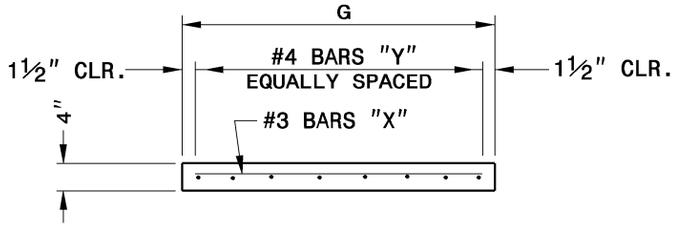

SECTION W-W

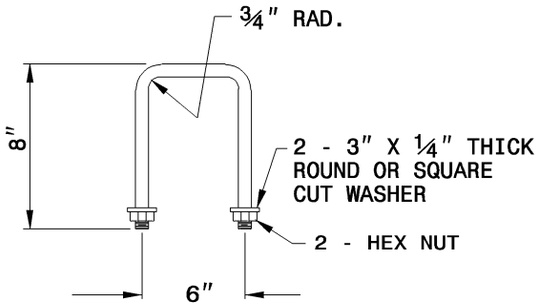

DETAIL OF HANDLE

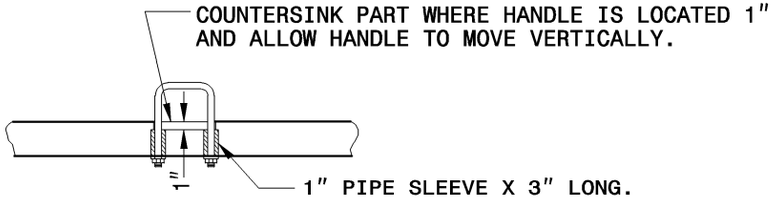

PART SECTION

THRU COVER SHOWING HANDLE

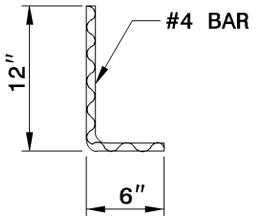

DOWEL

STATE OF
NORTH CAROLINA
DEPT. OF TRANSPORTATION
DIVISION OF HIGHWAYS
RALEIGH, N.C.

7-06

ENGLISH STANDARD DRAWING FOR

CONCRETE OPEN THROAT CATCH BASIN

12" THRU 48" PIPE

SHEET 2 OF 2

840.04

SHEET 2 OF 2

840.04