STATE OF
NORTH CAROLINA
DEPT. OF TRANSPORTATION
DIVISION OF HIGHWAYS
RALEIGH, N.C.

7-06

ENGLISH STANDARD DRAWING FOR

BRICK OPEN THROAT CATCH BASIN

12" THRU 48" PIPE

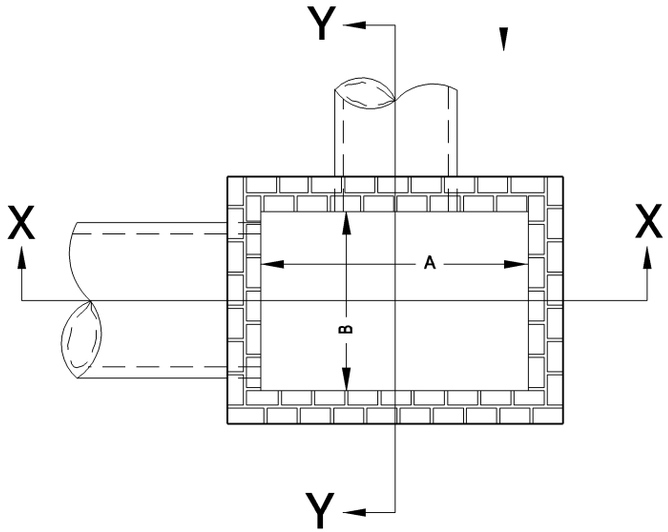

PLAN

NOTES: MORTAR JOINTS ½" +/- ⅛" THICK.

USE CLASS "B" CONCRETE THROUGHOUT.

USE FORMS FOR CONSTRUCTION OF THE BOTTOM SLAB.

USE #4 BAR DOWELS AT 12" CENTERS.

DEDUCT FOR PIPE(S) FROM TOTAL CU. YDS. OF BRICK MASONRY.

PROVIDE ALL CATCH BASINS OVER 3'-6" IN DEPTH WITH STEPS 12" ON CENTER. USE STEPS WHICH COMPLY WITH STD. DRAWING 840.66.

CONCAVE TOOL ALL EXPOSED MORTAR JOINTS.

USE BRICK OR CONCRETE BLOCK WHICH COMPLIES WITH THE REQUIREMENTS OF SECTION 840 OF THE STANDARD SPECIFICATIONS.

IF REINFORCED CONCRETE PIPE IS SET IN BOTTOM SLAB OF BOX, ADD TO SLAB AS SHOWN ON STD. NO. 840.00.

FOR 8'-0" IN HEIGHT OR LESS USE 6" WALLS AND BOTTOM SLAB. OVER 8'-0" TO 16'-0" IN HEIGHT USE 8" WALLS AND BOTTOM SLAB. ADJUST QUANTITIES ACCORDINGLY.

CONSTRUCT WITH PIPE CROWNS MATCHING.

CHAMFER ALL EXPOSED CORNERS 1".

DRAWING NOT TO SCALE.

* INCREASE THE SIZE OF THE 6" OPENING TO 8" MAX., AS DIRECTED BY THE ENGINEER BY ADDING 2" TO THE WALL HIEGHT ABOVE THE TOP ELEVATION. ADJUST QUANTITIES ACCORDINGLY.

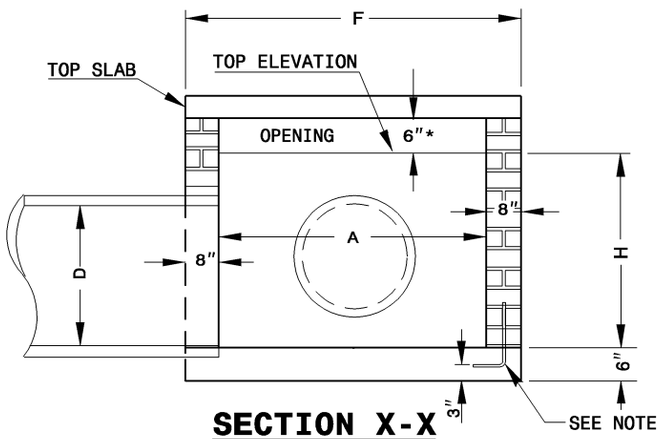

SECTION X-X

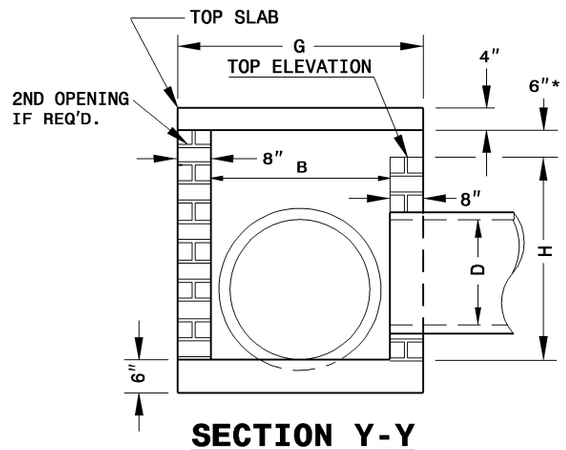

SECTION Y-Y

MIN. DIMENSIONS AND QUANTITIES FOR CATCH BASIN (BASED ON MIN. HEIGHT, H)

DIM'S OF BOX & PIPE				REINFORCING					SLAB DIMENSIONS		CU. YDS. CONC. IN BOX			TOTAL BRICK MASONRY		DEDUCTION ONE PIPE		DED. ONE 6" THROAT OPENING
PIPE	SPAN	WIDTH	HEIGHT	BARS - X		BARS - Y		TOTAL										
D	A	B	H	NO.	LENGTH	NO.	LENGTH	LBS	F	G	TOP SLAB	BOT. SLAB	TOTAL	PER FT. HT.	TOT. FOR H	C.S.	R.C.	CU.YDS.
12"	3'-6"	2'-3"	1'-10"	5	3'-4"	7	4'-7"	28	4'-10"	3'-7"	0.214	0.321	0.535	0.350	0.656	0.020	0.037	0.043
15"	3'-6"	2'-3"	2'-1"	5	3'-4"	7	4'-7"	28	4'-10"	3'-7"	0.214	0.321	0.535	0.350	0.744	0.031	0.059	0.043
18"	4'-0"	2'-8"	2'-4"	6	3'-9"	8	5'-1"	36	5'-4"	4'-0"	0.263	0.395	0.658	0.395	0.938	0.044	0.081	0.049
24"	4'-0"	2'-8"	2'-10"	6	3'-9"	8	5'-1"	36	5'-4"	4'-0"	0.263	0.395	0.658	0.395	1.136	0.078	0.134	0.049
30"	4'-0"	3'-6"	3'-4"	6	4'-7"	10	5'-1"	44	5'-4"	4'-10"	0.318	0.477	0.795	0.436	1.472	0.122	0.199	0.049
36"	4'-6"	4'-0"	3'-10"	6	5'-1"	11	5'-7"	52	5'-10"	5'-4"	0.384	0.576	0.960	0.485	1.879	0.176	0.278	0.056
42"	5'-0"	4'-6"	4'-4"	6	5'-7"	13	6'-1"	65	6'-4"	5'-10"	0.456	0.684	1.140	0.535	2.340	0.240	0.371	0.062
48"	5'-0"	5'-0"	4'-10"	6	6'-1"	14	6'-1"	71	6'-4"	6'-4"	0.495	0.743	1.238	0.559	2.725	0.313	0.476	0.062

SHEET 1 OF 2

840.05

STATE OF
NORTH CAROLINA
DEPT. OF TRANSPORTATION
DIVISION OF HIGHWAYS
RALEIGH, N.C.

7-06

ENGLISH STANDARD DRAWING FOR

BRICK OPEN THROAT CATCH BASIN

12" THRU 48" PIPE

SHEET 1 OF 2

840.05