STATE OF
NORTH CAROLINA
DEPT. OF TRANSPORTATION
DIVISION OF HIGHWAYS
RALEIGH, N.C.

7-06

ENGLISH STANDARD DRAWING FOR

BRICK CATCH BASIN WITH

SINGLE AND MULTIPLE PIPES

12″ THRU 48″ PIPE

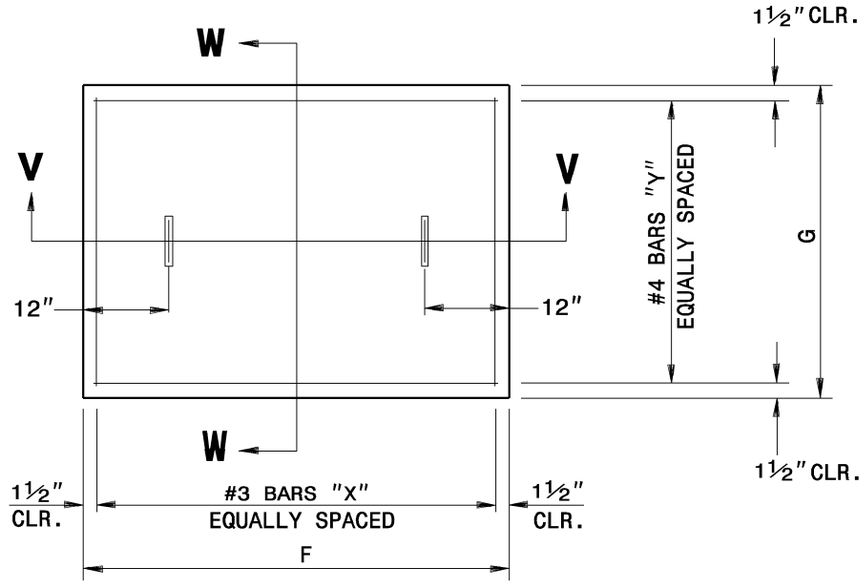

PLAN

PRECAST OR CAST IN PLACE TOP SLAB

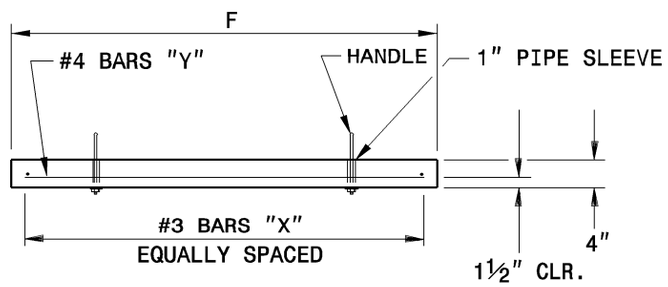

SECTION V-V

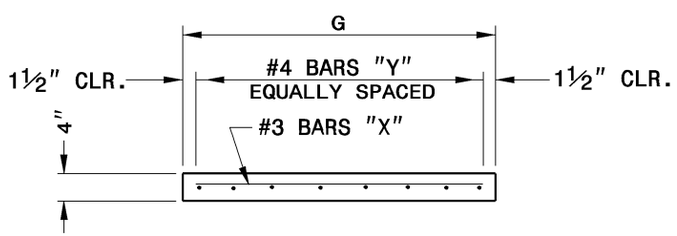

SECTION W-W

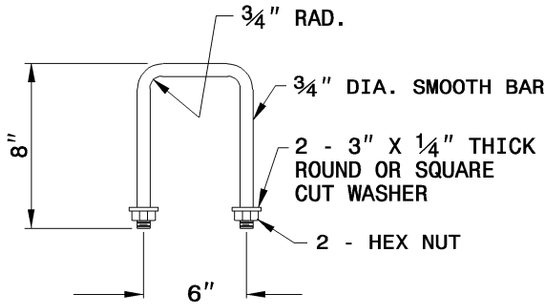

DETAIL OF HANDLE

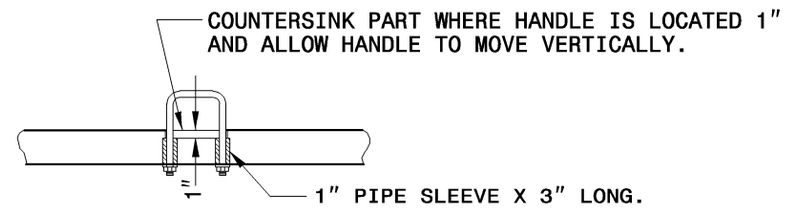

PART SECTION

THRU COVER SHOWING HANDLE

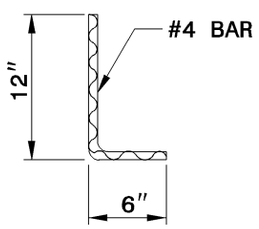

DOWEL

SHEET 2 OF 2

840.05

STATE OF
NORTH CAROLINA
DEPT. OF TRANSPORTATION
DIVISION OF HIGHWAYS
RALEIGH, N.C.

7-06

ENGLISH STANDARD DRAWING FOR

BRICK CATCH BASIN WITH

SINGLE AND MULTIPLE PIPES

12″ THRU 48″ PIPE

SHEET 2 OF 2

840.05