STATE OF NORTH CAROLINA
DEPT. OF TRANSPORTATION
DIVISION OF HIGHWAYS
RALEIGH, N.C.

7-06

ENGLISH STANDARD DRAWING FOR

CONCRETE GRATED DROP INLET TYPE 'A'

12" THRU 72" PIPE

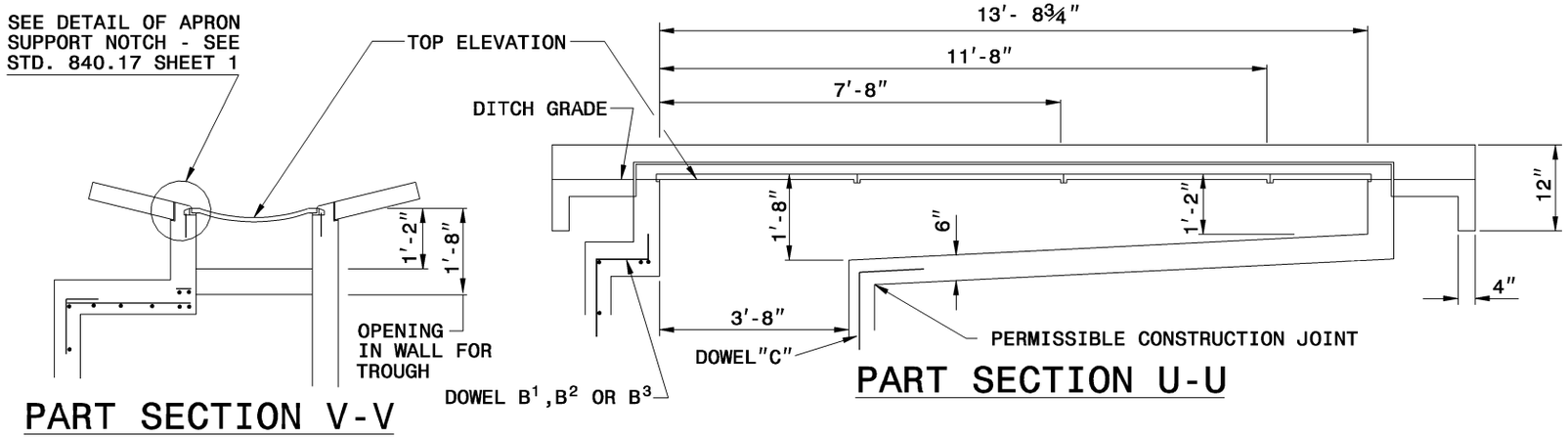

PART SECTION V-V

PART SECTION U-U

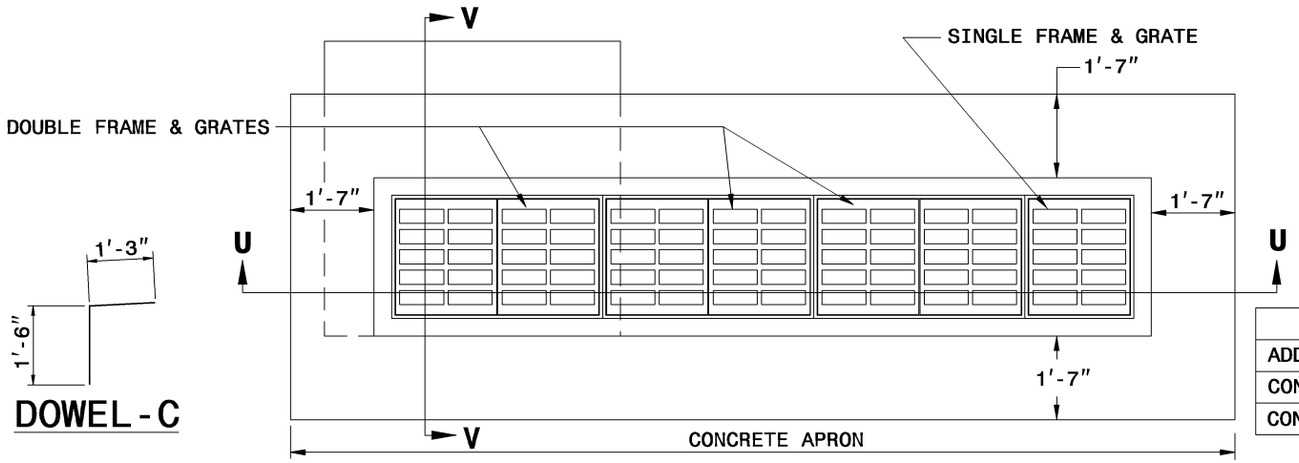

DOWEL-C

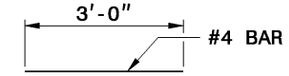

DOWEL-B1

FOR 15" THRU 36" INLET

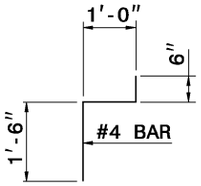

DOWEL-B2

FOR 42" INLET

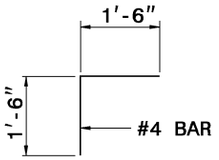

DOWEL-B3

QUANTITY TO BE ADDED FOR EACH 2' INCREMENT INLET OPENING

ADDITIONAL INLETS	2'-0"	4'-0"	6'-0"	8'-0"	10'-0"	12'-0"
CONCRETE CU. YDS.	0.191	0.417	0.665	0.897	1.145	1.380
CONCRETE APRON CU. YDS.	0.074	0.148	0.222	0.296	0.370	0.444

MIN. DIMENSIONS AND QUANTITIES FOR CONCRETE GRATED DROP INLET(BASED ON MIN. HEIGHT, H)

DIMENSIONS OF BOX AND PIPE						REINFORCING STEEL - NO. 4 BARS									CU YDS CONC. IN BOX					DEDUCTIONS FOR ONE PIPE	
PIPE	SPAN	WIDTH	SPAN	WIDTH	HEIGHT	BARS E		BARS F		BARS G		BARS H		TOTAL	BOTTOM SLAB	H TOTAL	H PER FT HT	APRON	TOTAL		
D	J	K	L	M	H	NO.	LENGTH	NO.	LENGTH	NO.	LENGTH	NO.	LENGTH	LBS.						C.S.	R.C.
12"	3'-8"	2'-0"	3'-8"	2'-0"	3'-9"	—	—	—	—	—	—	—	—	—	0.362	0.926	0.247	0.395	1.683	0.015	0.024
15"	3'-8"	2'-0"	3'-8"	2'-0"	4'-0"	—	—	—	—	—	—	—	—	—	0.362	0.988	0.247	0.395	1.745	0.023	0.036
18"				2'-0"	4'-3"	—	—	—	—	—	—	—	—	—	0.362	1.050	0.247		1.807	0.033	0.049
24"				2'-10"	4'-9"	8	1'-5"	6	4'-9"	—	—	—	—	27	0.444	1.362	0.278		2.201	0.059	0.085
30"			3'-8"	3'-5"	5'-3"	8	2'-0"	7	4'-9"	—	—	—	—	33	0.502	1.644	0.288		2.541	0.092	0.127
36"			4'-0"	4'-0"	5'-9"	8	2'-5"	8	4'-11"	4	0'-9"	2	4'-11"	47	0.560	1.931	0.321		2.920	0.132	0.178
42"			4'-10"	4'-10"	6'-3"	10	3'-1"	9	5'-7"		1'-5"	3	5'-7"	67	0.704	2.500	0.370		3.677	0.180	0.243
48"			5'-4"	5'-4"	6'-9"	11	3'-7"	10	6'-1"		1'-11"	4	6'-1"	87	0.823	3.013	0.407		4.315	0.235	0.317
54"			6'-0"	6'-0"	7'-3"	12	4'-1"	11	6'-7"		2'-5"	5	6'-7"	107	0.951	3.589	0.444		5.072	0.297	0.401
60"			6'-6"	6'-6"	7'-9"	13	4'-9"	12	7'-3"		3'-1"	6	7'-3"	135	1.311	4.539	0.494		6.170	0.367	0.495
66"			7'-2"	7'-2"	8'-3"	14	5'-4"	14	7'-10"		3'-7"	7	7'-10"	168	1.136	5.061	0.537		6.901	0.444	0.599
72"	3'-8"	2'-0"	7'-8"	7'-8"	8'-9"	15	5'-11"	15	8'-5"	4	4'-3"	8	8'-5"	199	1.500	5.860	0.580	0.395	7.868	0.528	0.713

SHEET 2 OF 2

840.17

STATE OF NORTH CAROLINA
DEPT. OF TRANSPORTATION
DIVISION OF HIGHWAYS
RALEIGH, N.C.

7-06

ENGLISH STANDARD DRAWING FOR

CONCRETE GRATED DROP INLET TYPE 'A'

12" THRU 72" PIPE

SHEET 2 OF 2

840.17