STATE OF
NORTH CAROLINA
DEPT. OF TRANSPORTATION
DIVISION OF HIGHWAYS
RALEIGH, N.C.

7-06

ENGLISH STANDARD DRAWING FOR

FRAMES AND NARROW SLOT FLAT GRATES

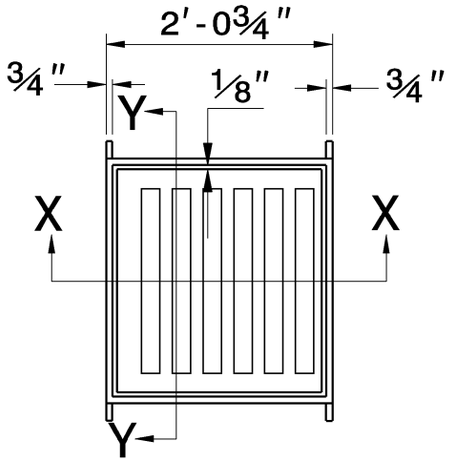

PLAN

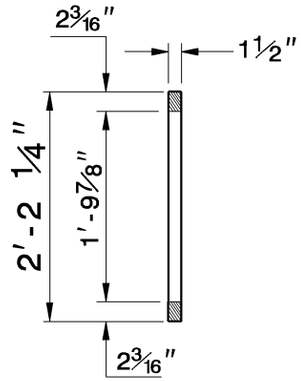

GRATE ELEVATION Y-Y

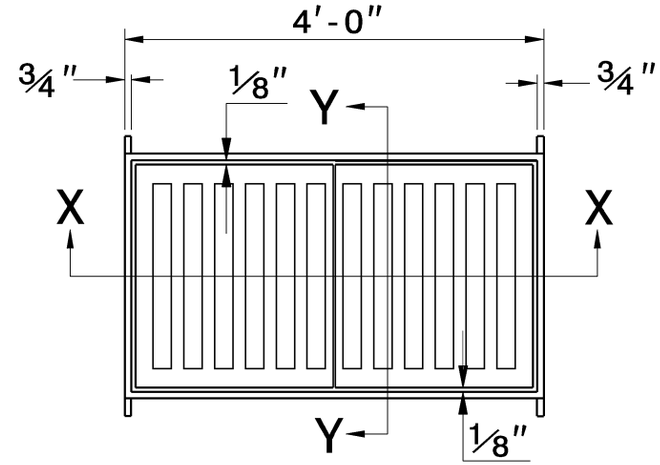

PLAN

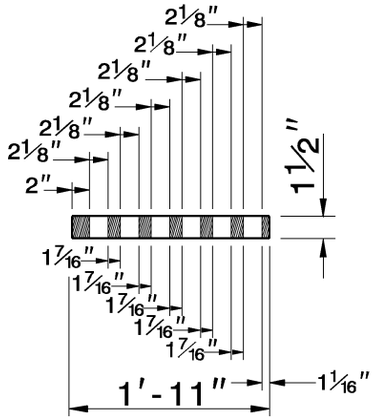

GRATE ELEVATION X-X

NOTE:
SEE STD. DWG. 840.25
FOR FRAME ANCHORAGE.

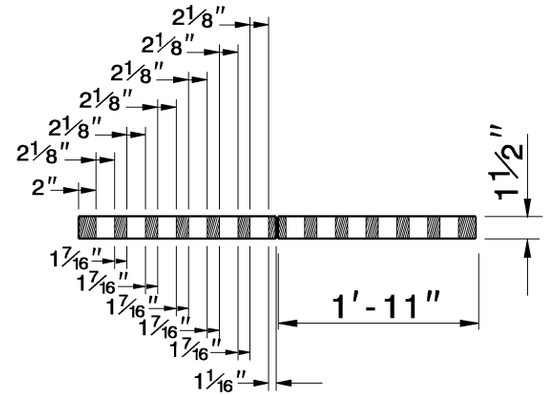

GRATE SECTION X-X

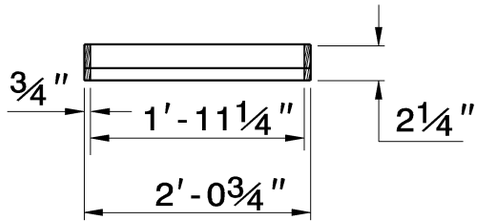

FRAME ELEVATION X-X

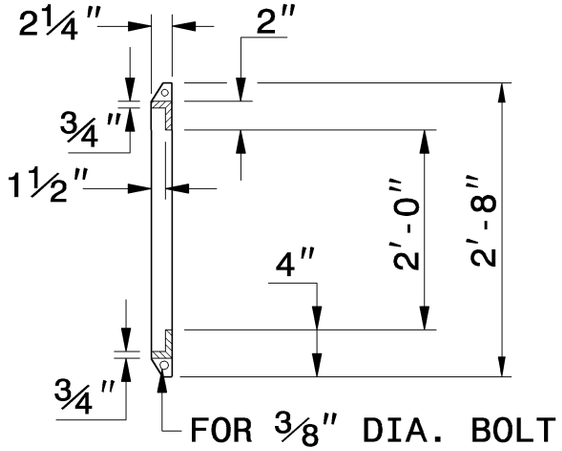

FRAME ELEVATION Y-Y

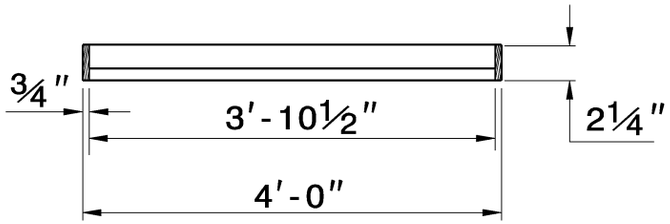

FRAME SECTION X-X

SHEET 1 OF 1

840.29

STATE OF
NORTH CAROLINA
DEPT. OF TRANSPORTATION
DIVISION OF HIGHWAYS
RALEIGH, N.C.

7-06

ENGLISH STANDARD DRAWING FOR

FRAMES AND NARROW SLOT FLAT GRATES

SHEET 1 OF 1

840.29