STATE OF
NORTH CAROLINA
DEPT. OF TRANSPORTATION
DIVISION OF HIGHWAYS
RALEIGH, N.C.

7-06

ENGLISH STANDARD DRAWING FOR

ANGLED VANE GRATES AND FRAMES

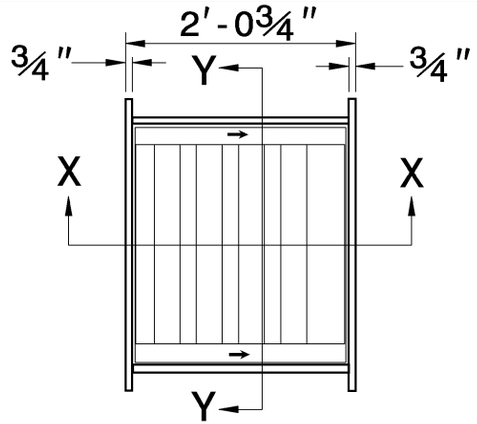

GRATE PLAN

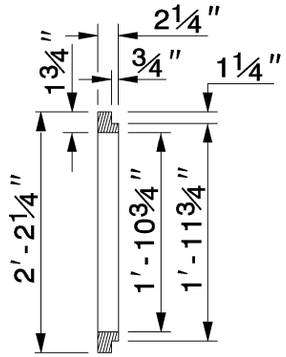

GRATE SECTION Y-Y

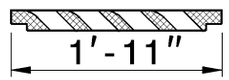

GRATE SECTION X-X

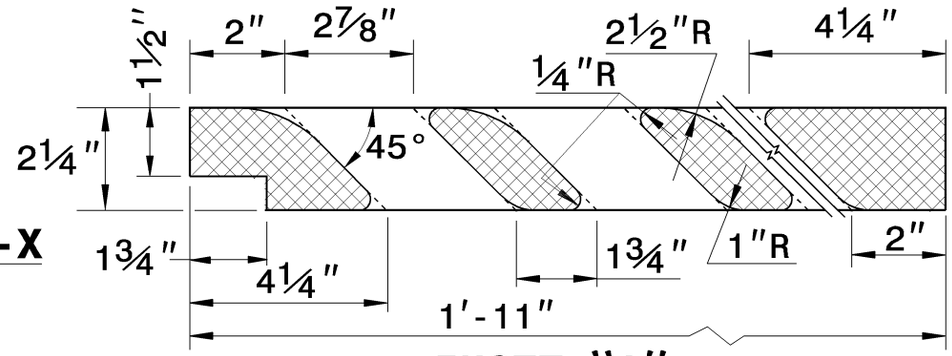

INSET "A"

(TYPICAL UNIT FOR SECTION Z-Z)

NOTE: SEE STD. DWG. 840.25
FOR FRAME ANCHORAGE.

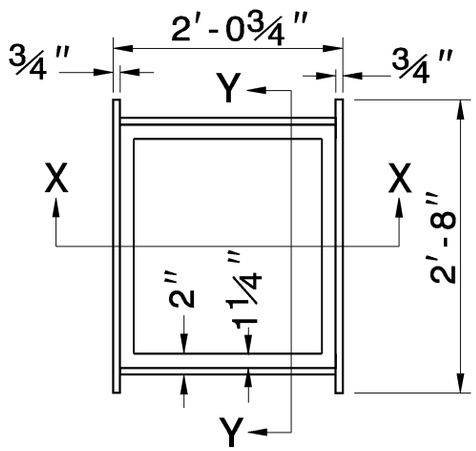

FRAME PLAN

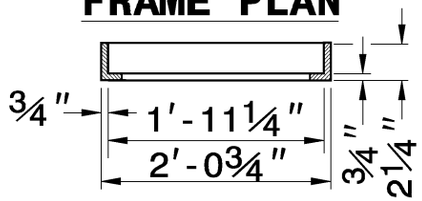

FRAME SECTION X-X

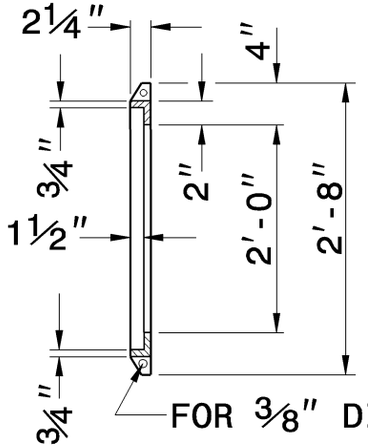

FRAME SECTION Y-Y

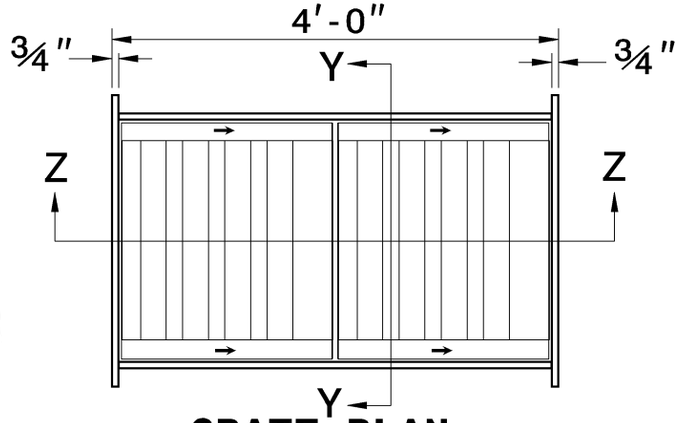

GRATE PLAN

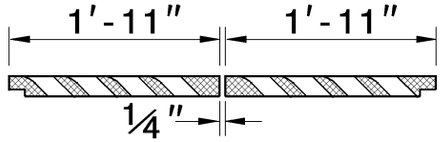

GRATE SECTION Z-Z

SEE INSET "A" FOR SECTION VIEW

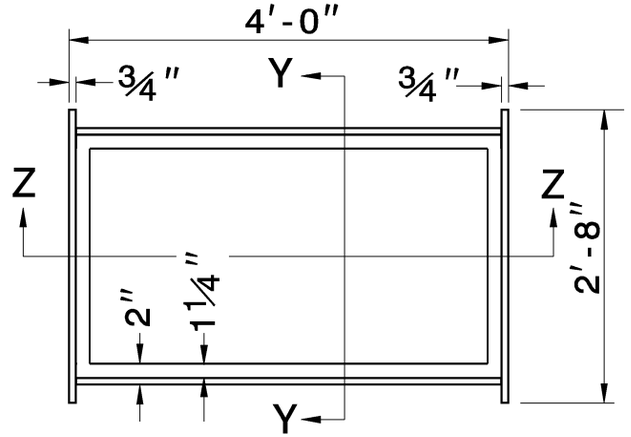

FRAME PLAN

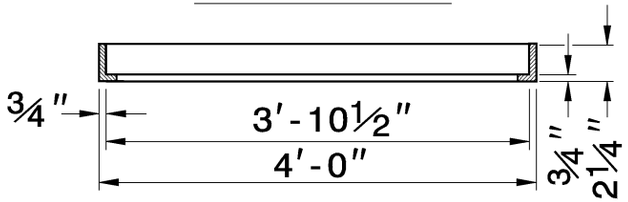

FRAME SECTION Z-Z

SHEET 1 OF 1

840.33

STATE OF
NORTH CAROLINA
DEPT. OF TRANSPORTATION
DIVISION OF HIGHWAYS
RALEIGH, N.C.

7-06

ENGLISH STANDARD DRAWING FOR

ANGLED VANE GRATES AND FRAMES

SHEET 1 OF 1

840.33