STATE OF
NORTH CAROLINA
DEPT. OF TRANSPORTATION
DIVISION OF HIGHWAYS
RALEIGH, N.C.

7-06

ENGLISH STANDARD DRAWING FOR

STEEL GRATE AND FRAME

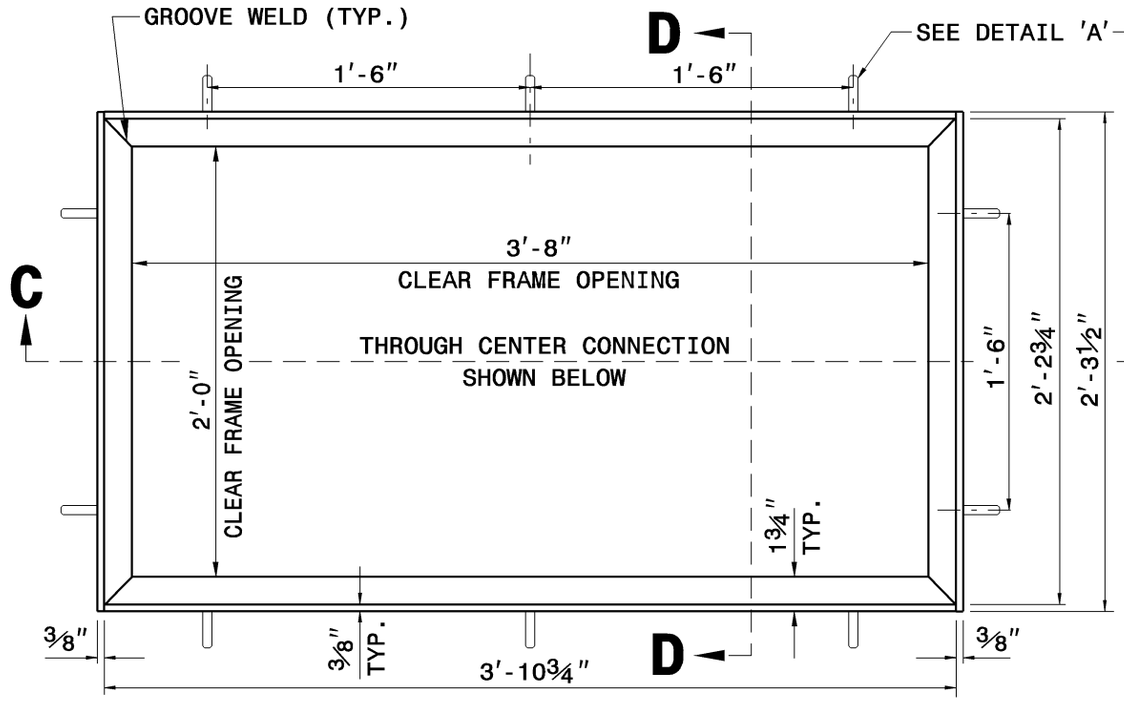

PLAN VIEW

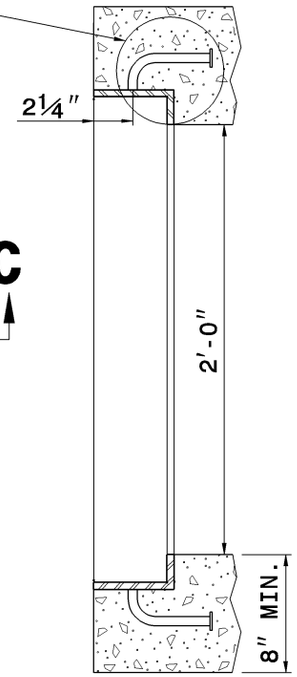

SECTION 'D-D'

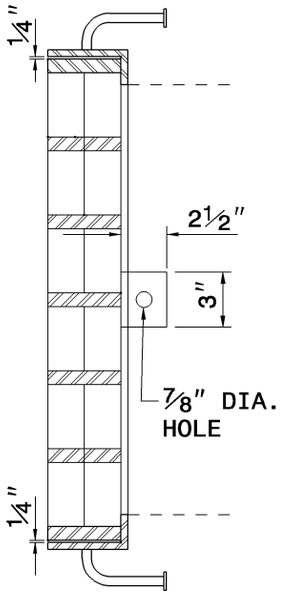

ELEVATION OF GRATE IN FRAME SYSTEM SHOWN THROUGH SECTION 'D-D'

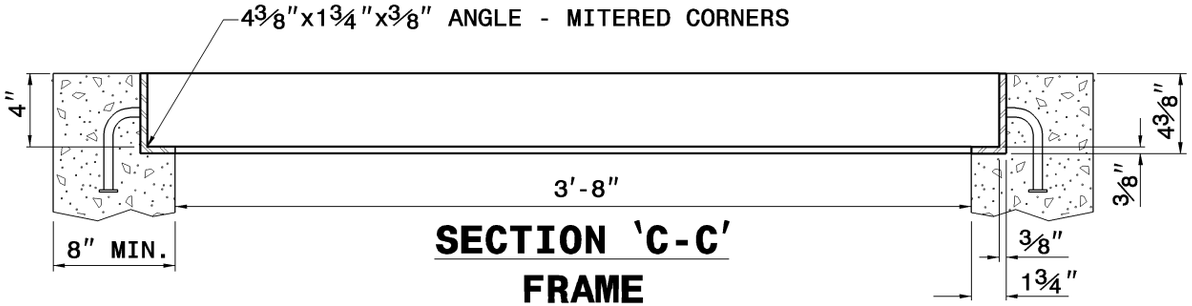

SECTION 'C-C'
FRAME

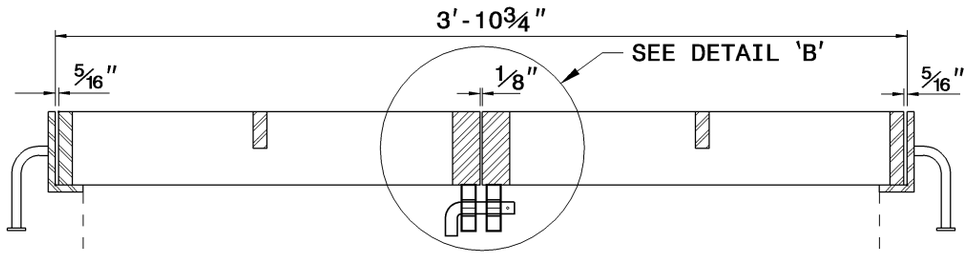

ELEVATION OF GRATES IN FRAME SYSTEM SECTION 'C-C'

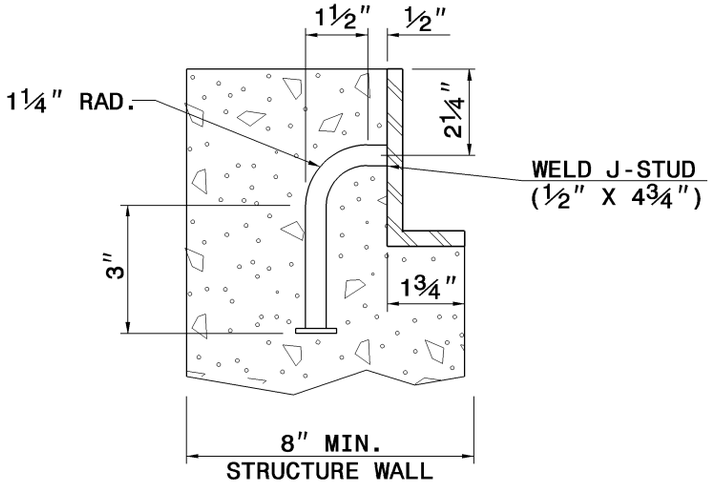

DETAIL 'A' STUD ANCHOR

STATE OF
NORTH CAROLINA
DEPT. OF TRANSPORTATION
DIVISION OF HIGHWAYS
RALEIGH, N.C.

7-06

ENGLISH STANDARD DRAWING FOR

STEEL GRATE AND FRAME

SHEET 1 OF 2
840.37