STATE OF
NORTH CAROLINA
DEPT. OF TRANSPORTATION
DIVISION OF HIGHWAYS
RALEIGH, N.C.

7-06

ENGLISH STANDARD DRAWING FOR

PRECAST DRAINAGE STRUCTURE

(SOLID AND WAFFLE WALL)

SHEET 1 OF 2

840.45

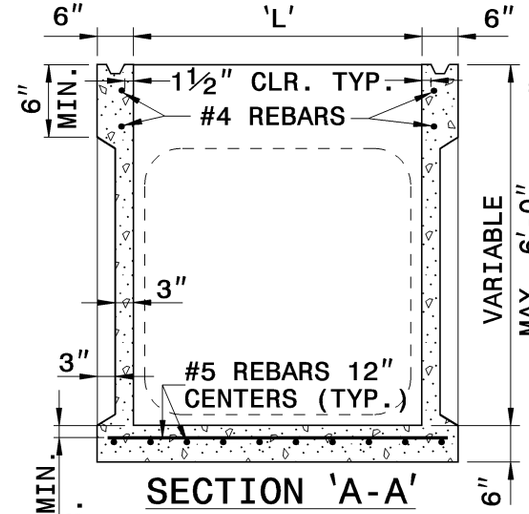

SECTION 'A-A'

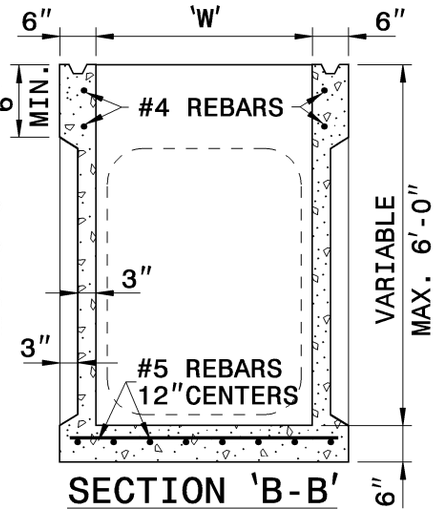

SECTION 'B-B'

THE PATTERN OF THE KNOCK-OUT PANELS ARE SHOWN FOR ILLUSTRATIVE PURPOSES ONLY.

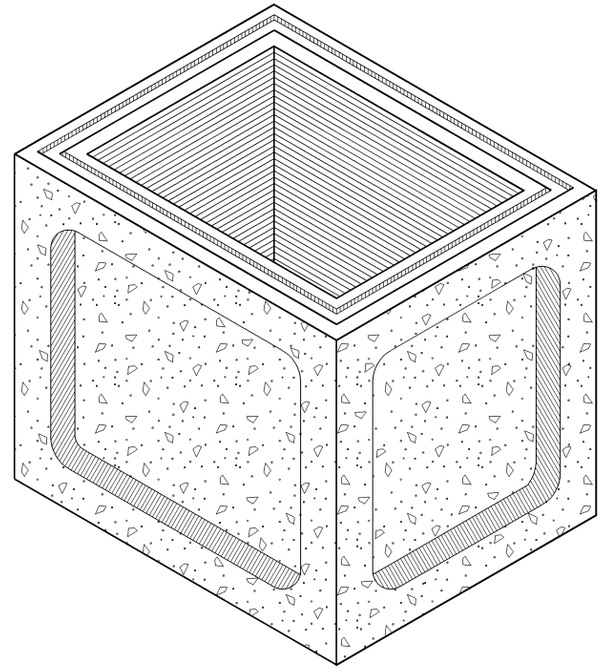

WAFFLE WALL ISOMETRIC VIEW

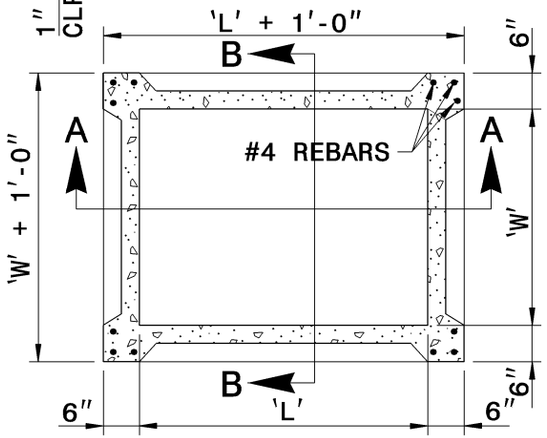

WAFFLE WALL PLAN VIEW

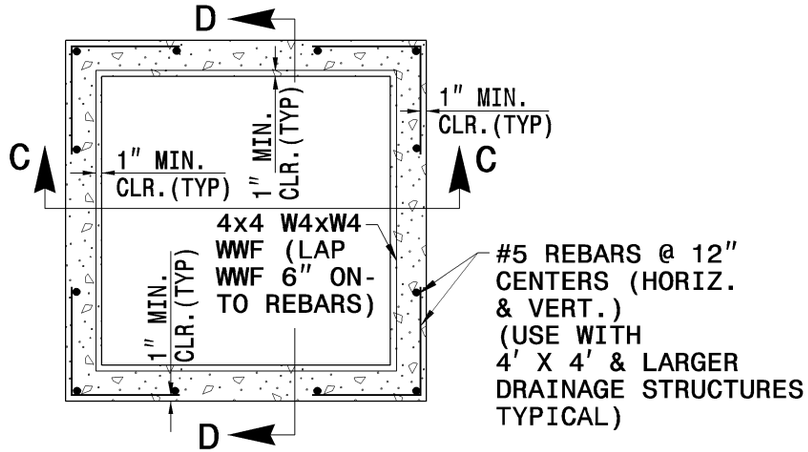

SOLID WALL PLAN VIEW

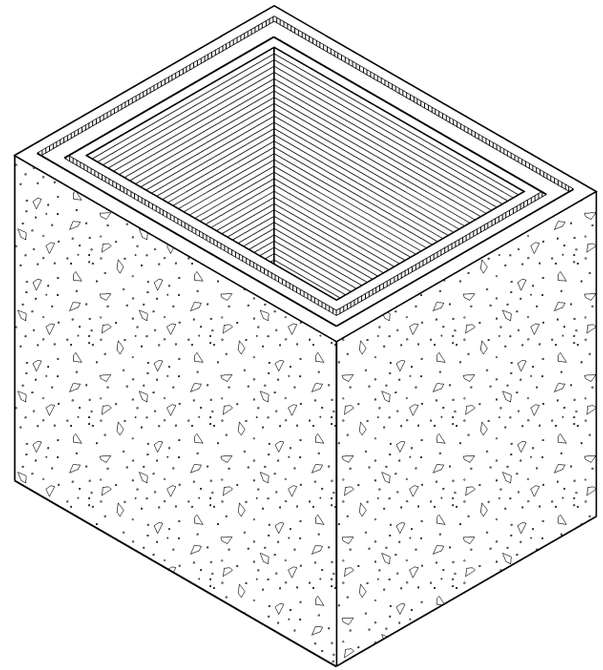

SOLID WALL ISOMETRIC VIEW

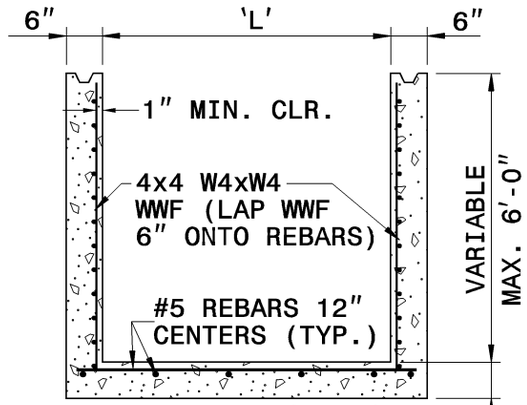

SECTION 'C-C'

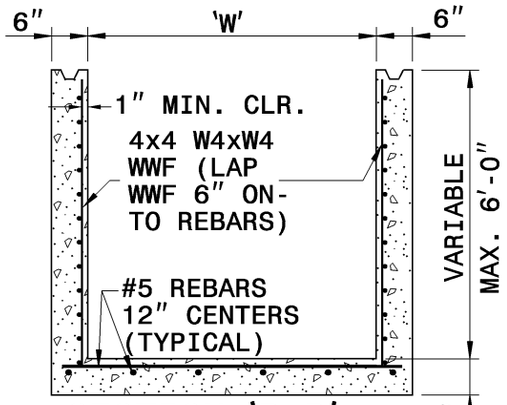

SECTION 'D-D'

STATE OF
NORTH CAROLINA
DEPT. OF TRANSPORTATION
DIVISION OF HIGHWAYS
RALEIGH, N.C.

7-06

ENGLISH STANDARD DRAWING FOR

PRECAST DRAINAGE STRUCTURE

(SOLID AND WAFFLE WALL)

SHEET 1 OF 2

840.45