STATE OF
NORTH CAROLINA
DEPT. OF TRANSPORTATION
DIVISION OF HIGHWAYS
RALEIGH, N.C.

7-06

ENGLISH STANDARD DRAWING FOR

CONCRETE CURB, GUTTER AND CURB & GUTTER

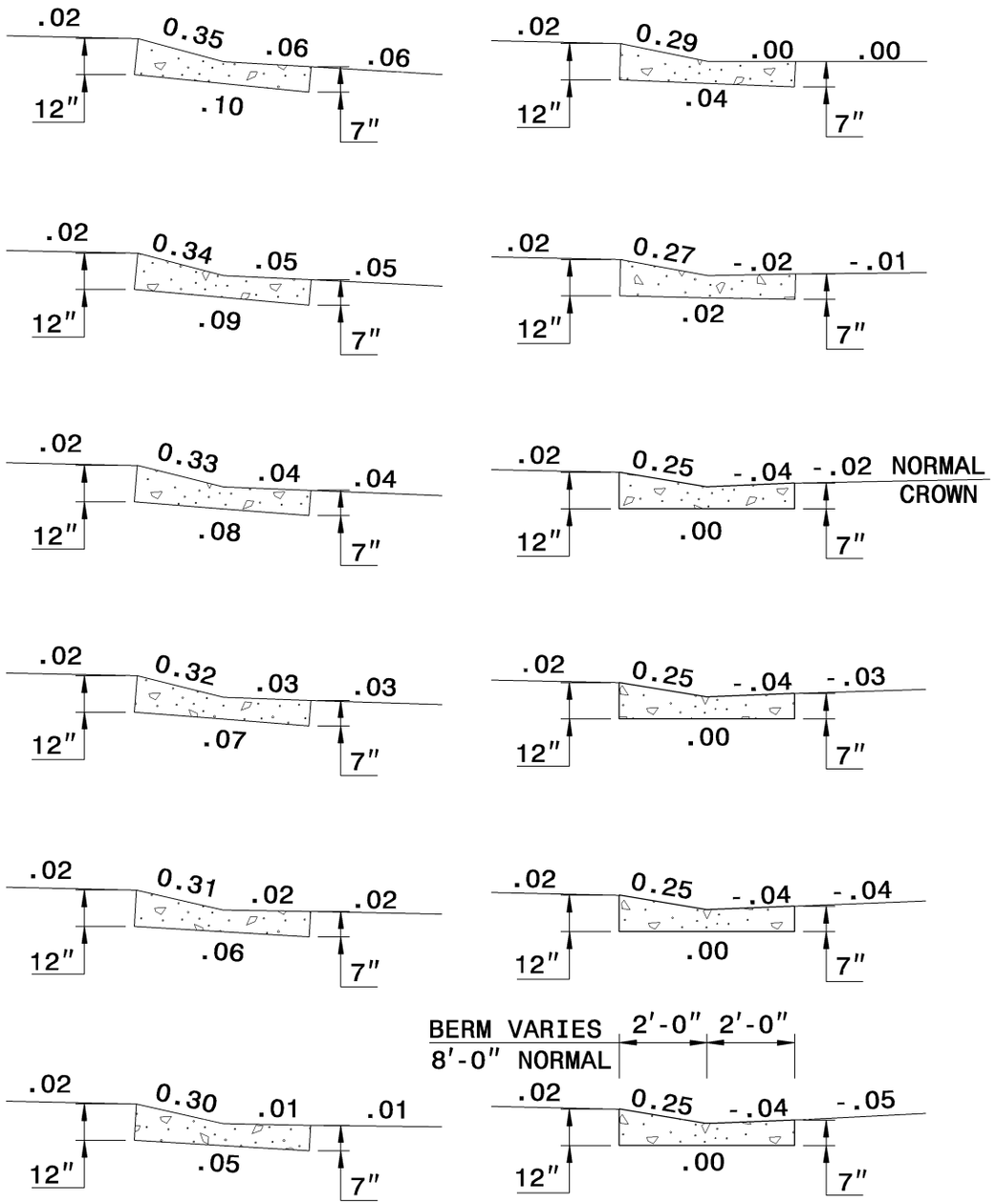

SECTION VIEWS OF
EXPRESSWAY GUTTER IN SUPER ELEVATION

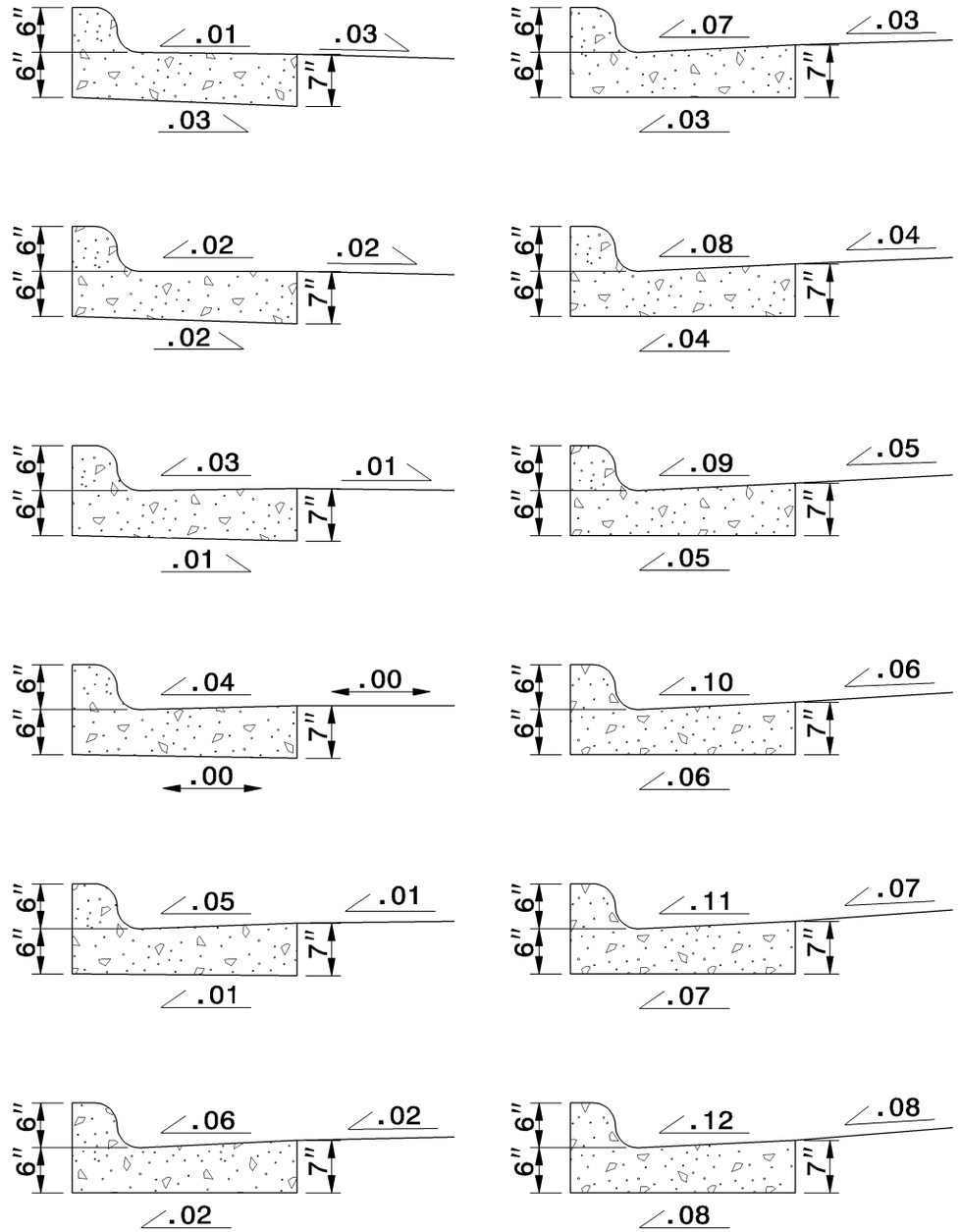

SECTION VIEWS OF
2'-6" CURB AND GUTTER SUPERELEVATION RATES

STATE OF
NORTH CAROLINA
DEPT. OF TRANSPORTATION
DIVISION OF HIGHWAYS
RALEIGH, N.C.

7-06

ENGLISH STANDARD DRAWING FOR

CONCRETE CURB, GUTTER AND CURB & GUTTER

SHEET 2 OF 3
846.01