STATE OF
NORTH CAROLINA
DEPT. OF TRANSPORTATION
DIVISION OF HIGHWAYS
RALEIGH, N.C.

7-06

ENGLISH STANDARD DRAWING FOR

FUNNEL DRAIN INSTALLATION IN SHOULDER BERM GUTTER

SHEET 1 OF 2

846.03

* CENTER FUNNEL DRAIN AND APRON IN THIS LOCATION.

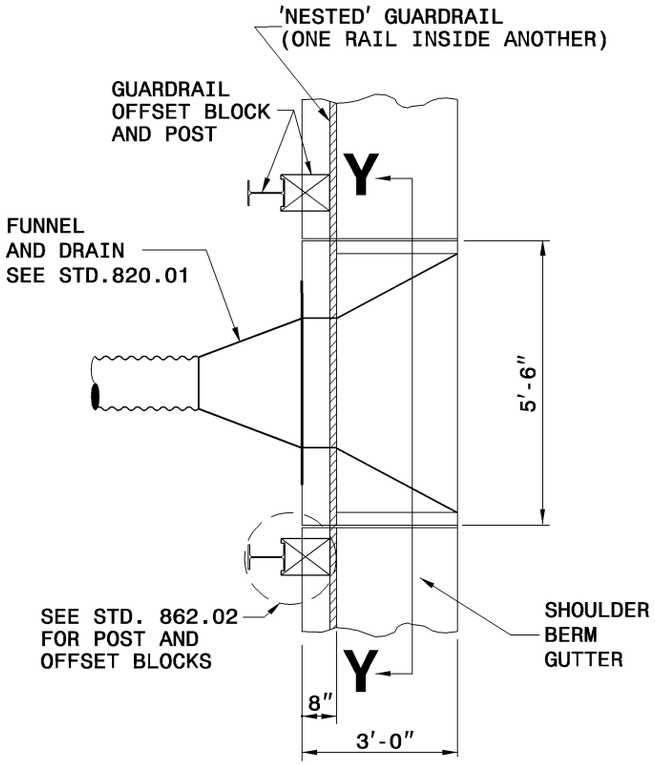

PLAN

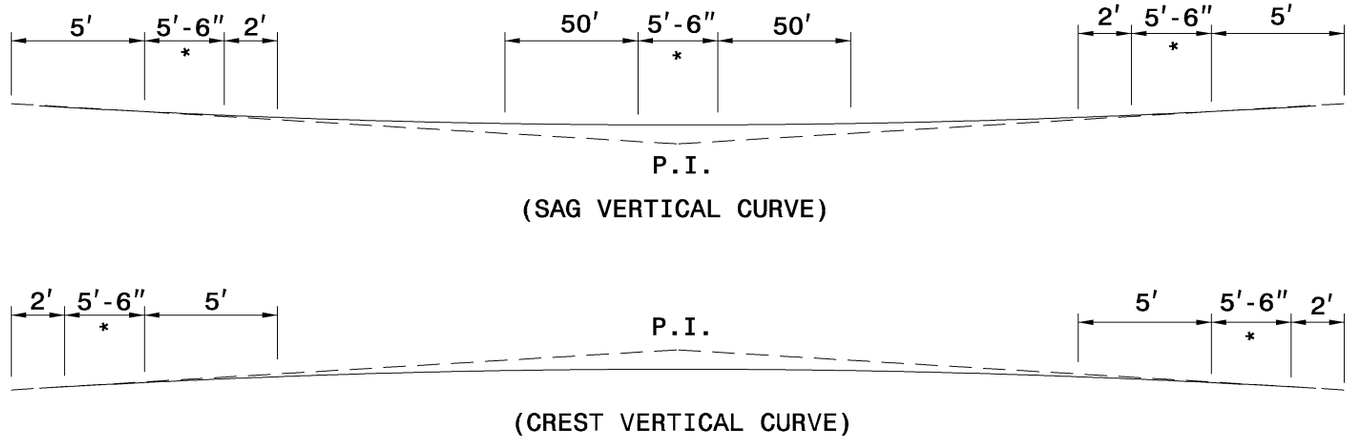

GUIDE FOR PLACING FUNNELS IN MINIMUM LENGTHS OF SHOULDER BERM GUTTER

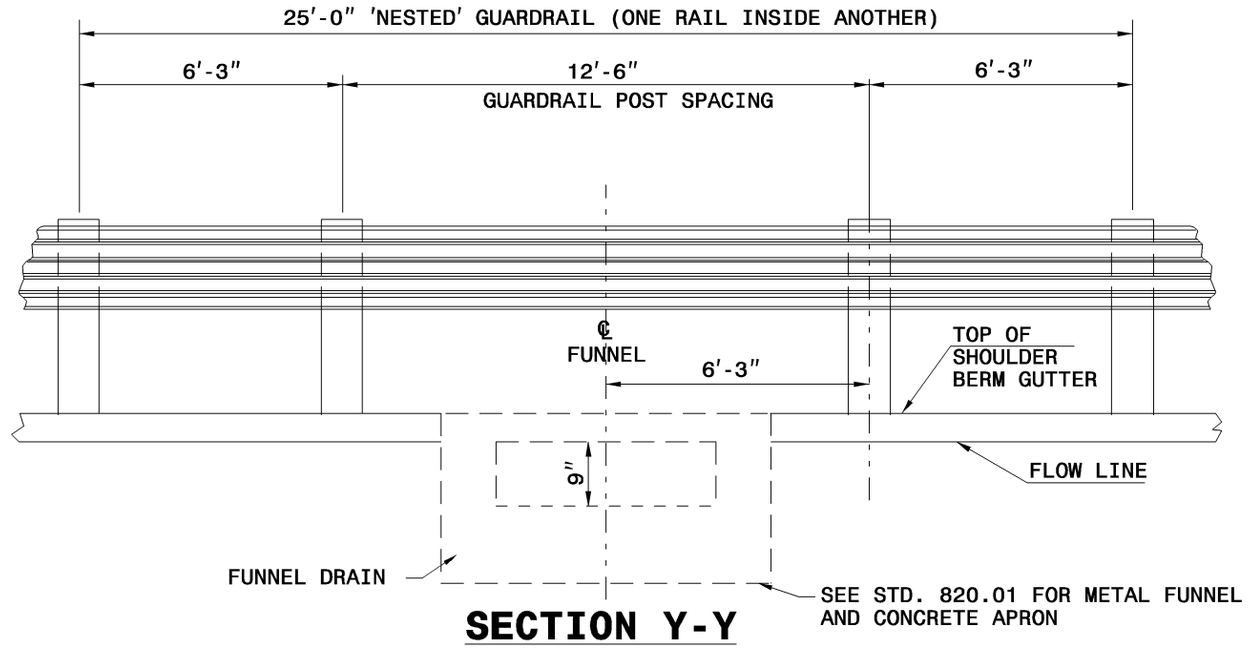

SECTION Y-Y

FUNNEL INSTALLATION IN SHOULDER BERM GUTTER

STATE OF
NORTH CAROLINA
DEPT. OF TRANSPORTATION
DIVISION OF HIGHWAYS
RALEIGH, N.C.

7-06

ENGLISH STANDARD DRAWING FOR

FUNNEL DRAIN INSTALLATION IN SHOULDER BERM GUTTER

SHEET 1 OF 2

846.03