STATE OF
NORTH CAROLINA
DEPT. OF TRANSPORTATION
DIVISION OF HIGHWAYS
RALEIGH, N.C.

7-06

ENGLISH STANDARD DRAWING FOR

GUIDE FOR BERM DRAINAGE OUTLET

15″ AND 18″ PIPE

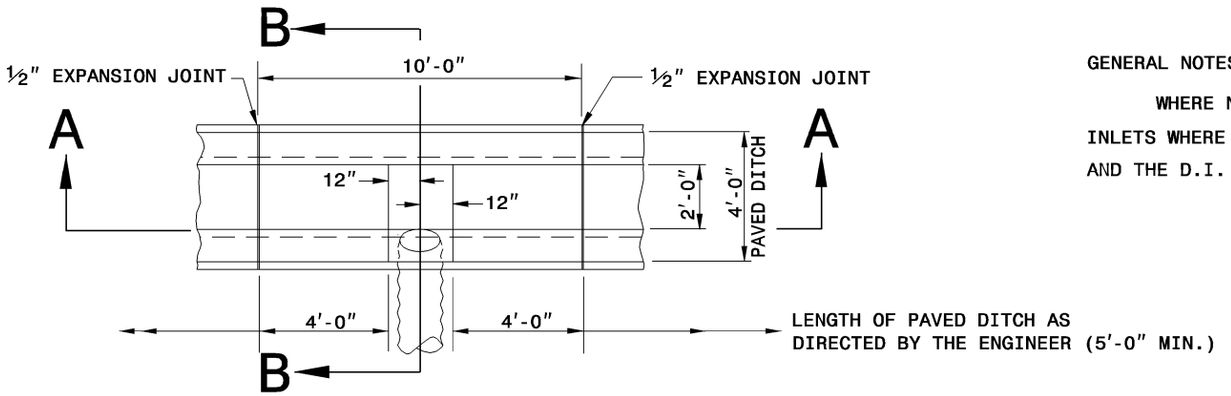

PLAN

GENERAL NOTES:

WHERE NECESSARY, ELBOWS MAY BE USED TO SKEW PIPE TO FIT INLETS WHERE THERE IS OFFSET BETWEEN THE INLET END AT BERM AND THE D.I.

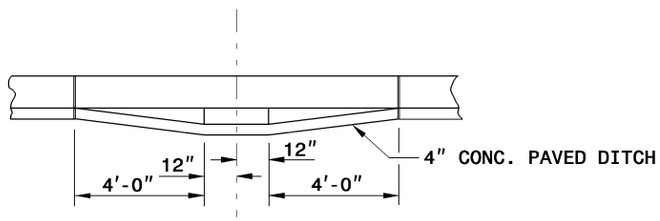

SECTION A-A

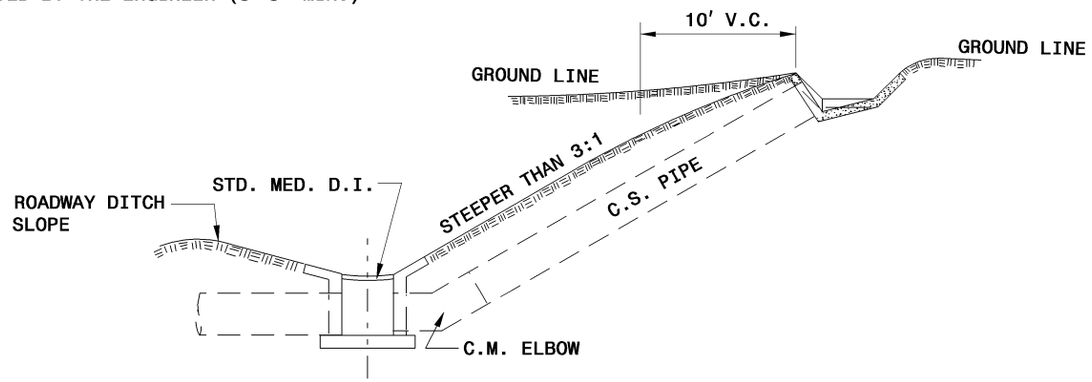

ELEVATION FOR SLOPE GREATER THAN 3:1

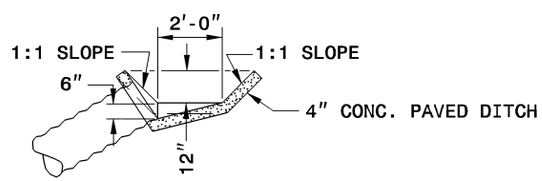

SECTION B-B

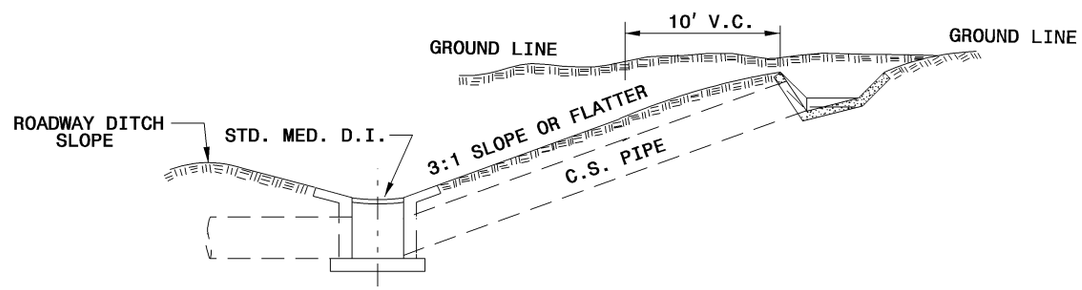

ELEVATION FOR SLOPE 3:1 OR LESS

SHEET 1 OF 1

850.10

STATE OF
NORTH CAROLINA
DEPT. OF TRANSPORTATION
DIVISION OF HIGHWAYS
RALEIGH, N.C.

7-06

ENGLISH STANDARD DRAWING FOR

GUIDE FOR BERM DRAINAGE OUTLET

15″ AND 18″ PIPE

SHEET 1 OF 1

850.10