STATE OF
NORTH CAROLINA
DEPT. OF TRANSPORTATION
DIVISION OF HIGHWAYS
RALEIGH, N.C.

7-06

ENGLISH STANDARD DRAWING FOR

METHOD FOR PLACEMENT OF DROP INLETS IN CONCRETE ISLANDS

SHEET 1 OF 1

852.06

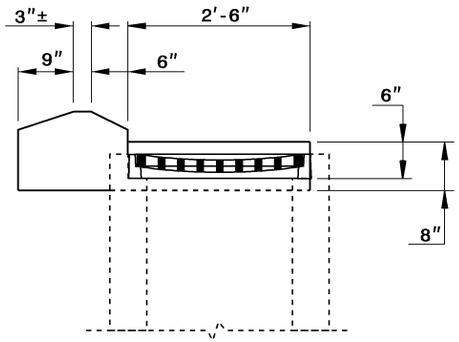

SECTION 'A-A'

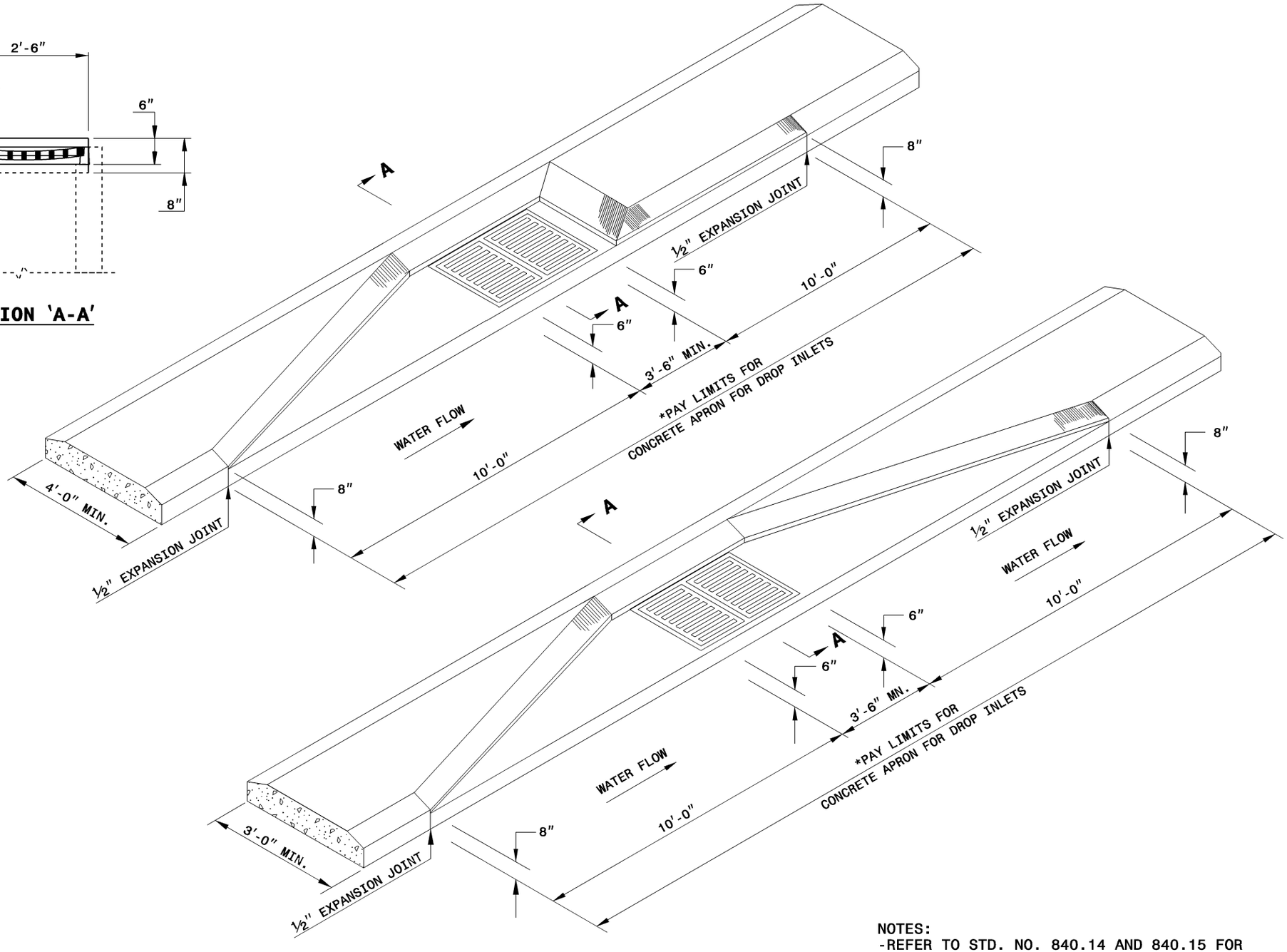

*CONCRETE APRON IS INCIDENTAL TO
CONSTRUCTION OF THE DRAINAGE STRUCTURE

NOTES:
-REFER TO STD. NO. 840.14 AND 840.15 FOR
DRAINAGE STRUCTURE.
-REFER TO STD. NO. 840.16 FOR GRATE AND FRAME.

STATE OF
NORTH CAROLINA
DEPT. OF TRANSPORTATION
DIVISION OF HIGHWAYS
RALEIGH, N.C.

7-06

ENGLISH STANDARD DRAWING FOR

METHOD FOR PLACEMENT OF DROP INLETS IN CONCRETE ISLANDS

SHEET 1 OF 1

852.06