STATE OF
NORTH CAROLINA
DEPT. OF TRANSPORTATION
DIVISION OF HIGHWAYS
RALEIGH, N.C.

7-06

ENGLISH STANDARD DRAWING FOR

DOUBLE FACED CONCRETE BARRIER

TYPES I, II, III & IV

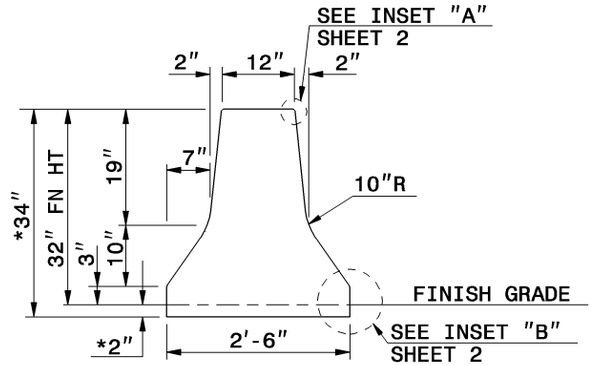

SECTION X-X

TYPE I - GLARE SCREEN PERMITTED

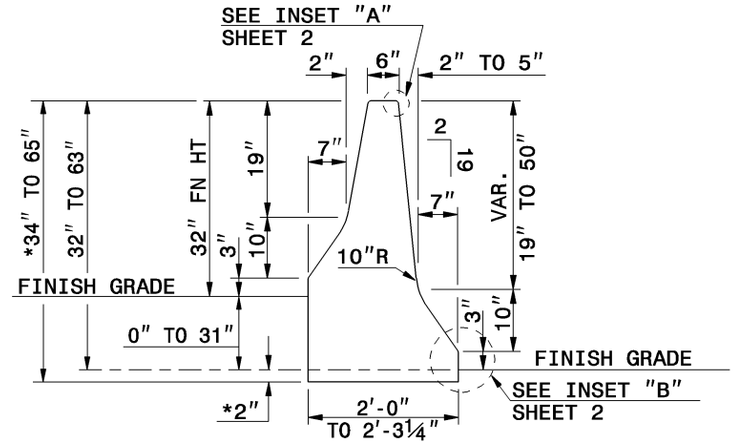

SECTION X-X

TYPE III - NO GLARE SCREEN PERMITTED

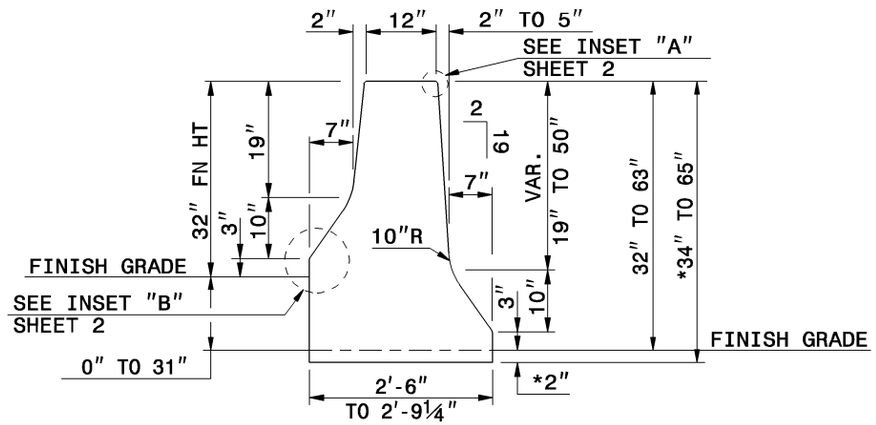

SECTION X-X

TYPE II - GLARE SCREEN PERMITTED

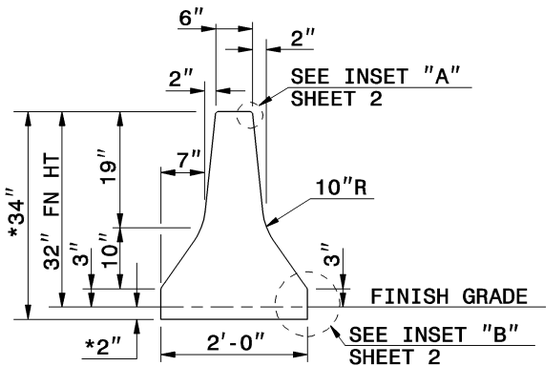

SECTION X-X

TYPE IV - NO GLARE SCREEN PERMITTED

NOTE:
REFER TO PLAN SHEET AND/OR TYPICAL SECTIONS FOR PROPER BARRIER ORIENTATION.

*THE 2" DIMENSION FROM FINSIH GRADE TO THE BASE IS A MINIMUM DIMENSION.
REFER TO PLAN TYPICAL SECTIONS AND PAVEMENT SCHEDULE TO DETERMINE KEY-IN DEPTH.

GENERAL NOTES:

CONSTRUCT CONCRETE BARRIER OF CLASS 'AA' CONCRETE. (SEE SPECIFICATIONS SECTION 854).

CONSTRUCT EXPANSION AND CONTRACTION JOINTS AS SHOWN ON SHEET 2.

SEAL EXPANSION JOINTS WITH JOINT FILLER. (SEE SECTION 1028 OF THE SPECIFICATIONS).

SUBMIT ALTERNATIVE METHODS FOR STEEL FABRICATION PLACEMENT FOR REVIEW.

STATE OF
NORTH CAROLINA
DEPT. OF TRANSPORTATION
DIVISION OF HIGHWAYS
RALEIGH, N.C.

7-06

ENGLISH STANDARD DRAWING FOR

DOUBLE FACED CONCRETE BARRIER

TYPES I, II, III & IV

SHEET 1 OF 4
854.01