STATE OF
NORTH CAROLINA
DEPT. OF TRANSPORTATION
DIVISION OF HIGHWAYS
RALEIGH, N.C.

7-06

ENGLISH STANDARD DRAWING FOR

DOUBLE FACED CONCRETE BARRIER

TYPES I, II, III & IV

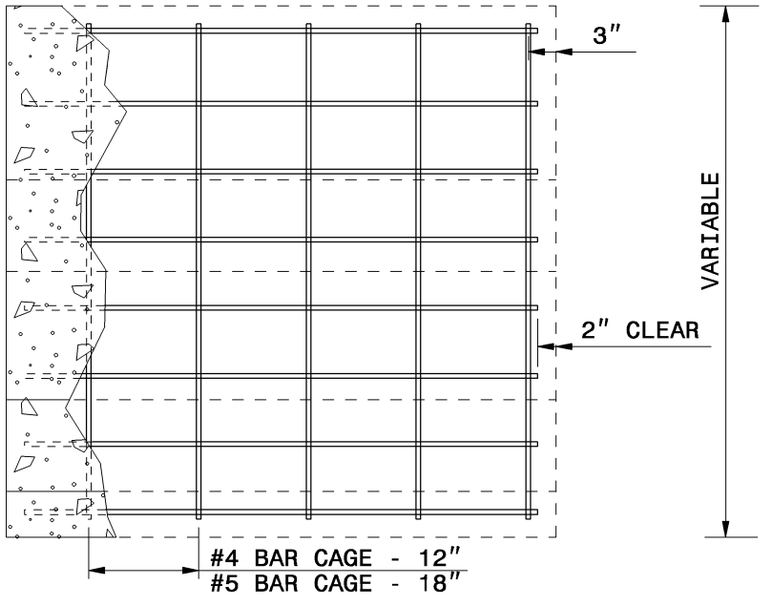

ELEVATION VIEW

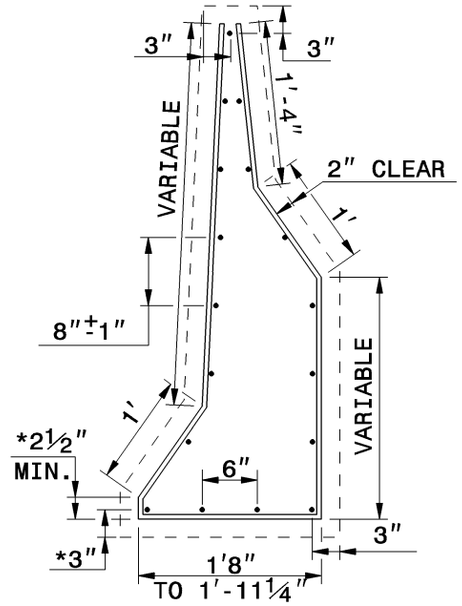

SECTION VIEW

TYPE III

MIN. 2'-0" BASE

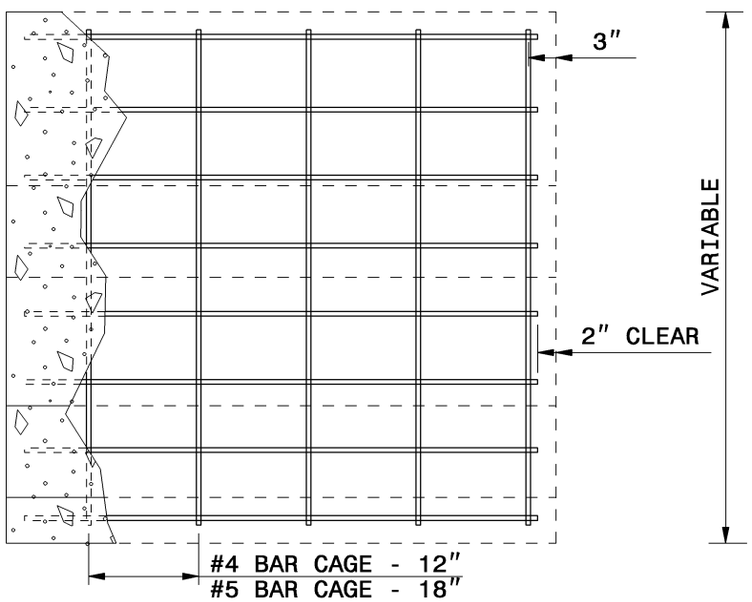

ELEVATION VIEW

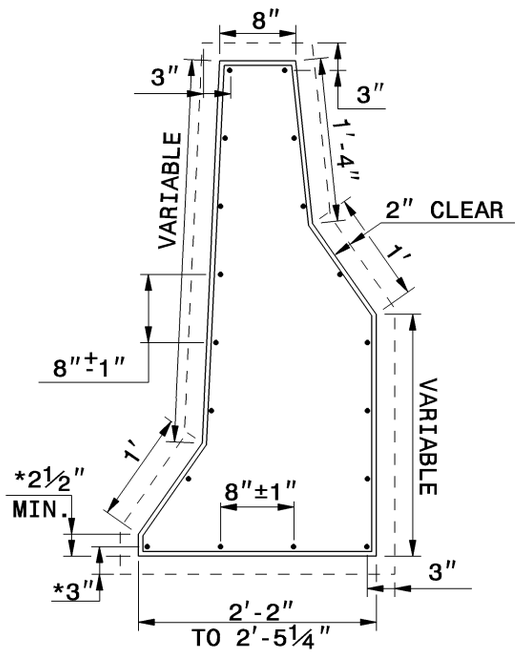

SECTION VIEW

TYPE II

MIN. 2'-6" BASE

NOTES:

1. EVENLY SPACE HORIZONTAL REBAR 8"±1" UNLESS OTHERWISE NOTED.
2. USE #4 BAR HORIZONTAL STEEL AND #4 OR #5 FOR VERTICAL CAGE.
3. SUBMIT CHANGES IN STEEL PLACEMENT OR SIZE TO THE ENGINEER.
4. USE SPLICE LENGTHS EQUAL TO 20 TIMES THE DIAMETER OF THE BAR.

* REFER TO PLAN TYPICAL SECTIONS AND PAVEMENT SCHEDULE TO DETERMINE KEY-IN DEPTH. DIMENSIONS SHOWN ARE BASED ON A 2" MIN. KEY-IN DEPTH.

STEEL PLACEMENT FOR CAST-IN-PLACE OR SLIP-FORM CONCRETE BARRIER

STATE OF
NORTH CAROLINA
DEPT. OF TRANSPORTATION
DIVISION OF HIGHWAYS
RALEIGH, N.C.

7-06

ENGLISH STANDARD DRAWING FOR

DOUBLE FACED CONCRETE BARRIER

TYPES I, II, III & IV

SHEET 4 OF 4

854.01