STATE OF
NORTH CAROLINA
DEPT. OF TRANSPORTATION
DIVISION OF HIGHWAYS
RALEIGH, N.C.

7-06

ENGLISH STANDARD DRAWING FOR

CONCRETE MEDIAN BARRIER

PRECAST PERMANENT

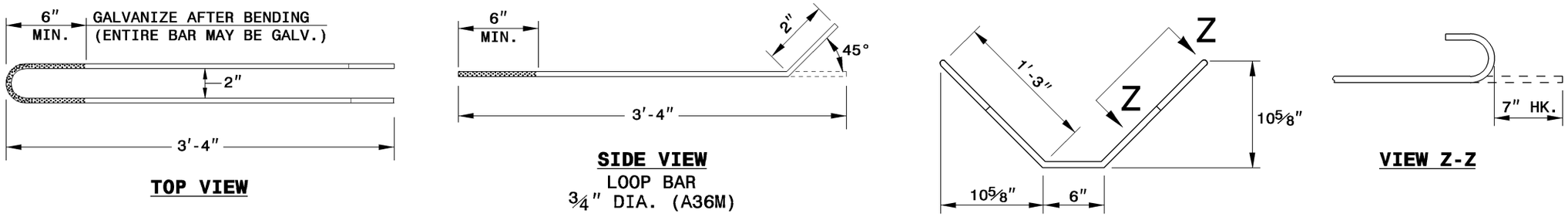

TOP VIEW

SIDE VIEW
LOOP BAR
¾" DIA. (A36M)

S1 BARS
#5 BARS

VIEW Z-Z

REINFORCEMENT DETAIL

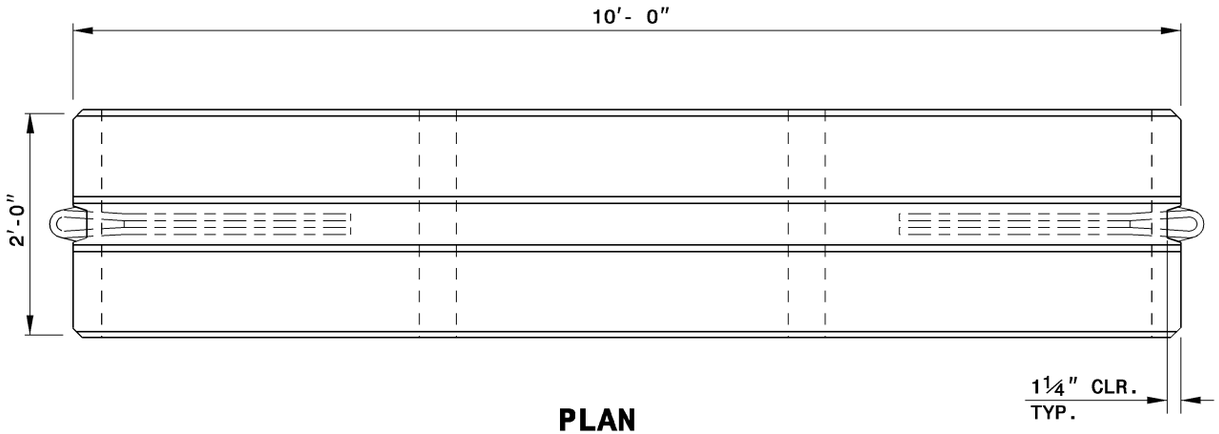

PLAN

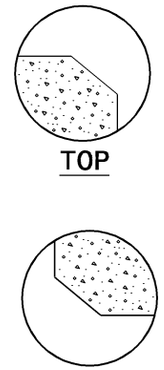

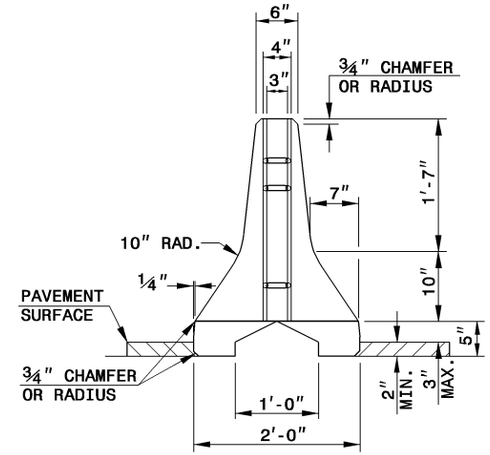

END VIEW A-A

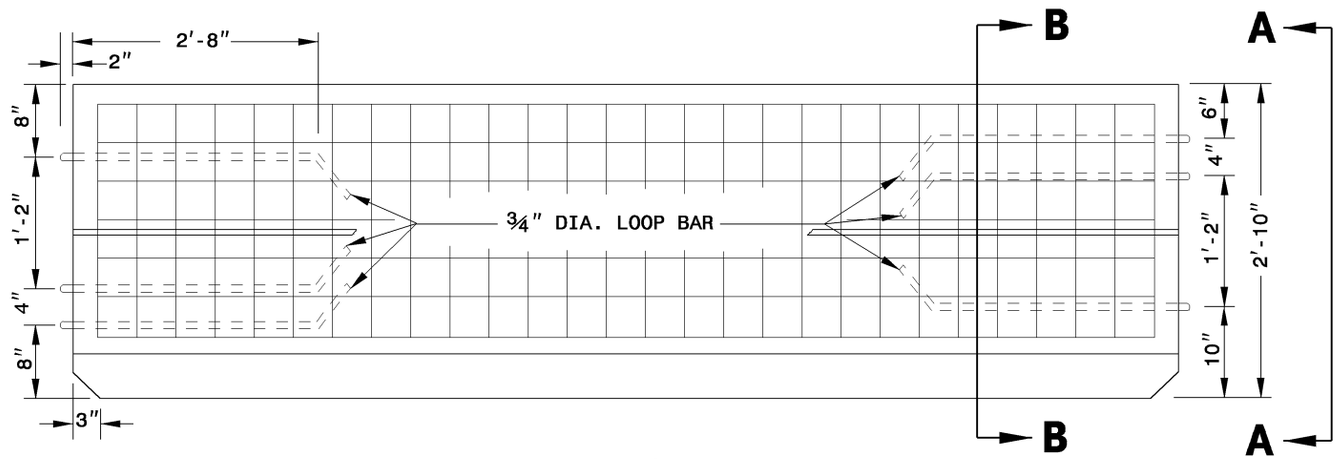

ELEVATION

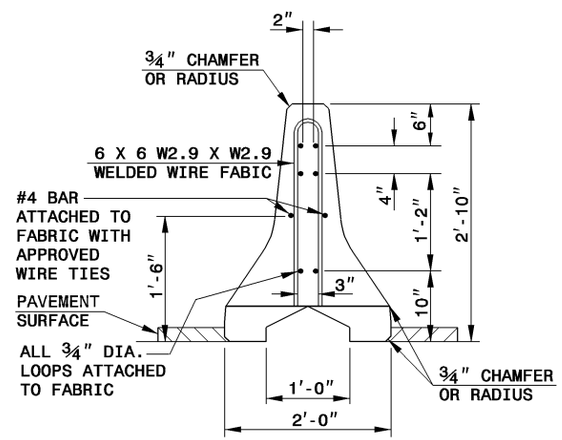

SECTION B-B

SHEET 1 OF 2

854.04

STATE OF
NORTH CAROLINA
DEPT. OF TRANSPORTATION
DIVISION OF HIGHWAYS
RALEIGH, N.C.

7-06

ENGLISH STANDARD DRAWING FOR

CONCRETE MEDIAN BARRIER

PRECAST PERMANENT

SHEET 1 OF 2

854.04