STATE OF
NORTH CAROLINA
DEPT. OF TRANSPORTATION
DIVISION OF HIGHWAYS
RALEIGH, N.C.

7-06

ENGLISH STANDARD DRAWING FOR
CONCRETE MEDIAN BARRIER
PRECAST PERMANENT

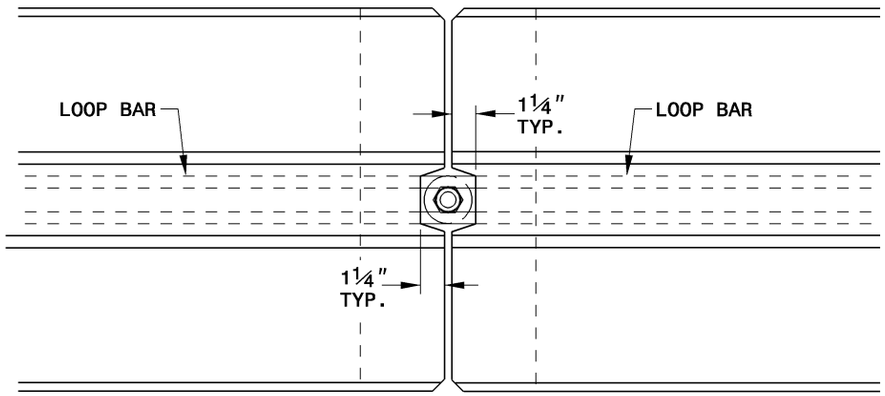

PLAN OF CONNECTION

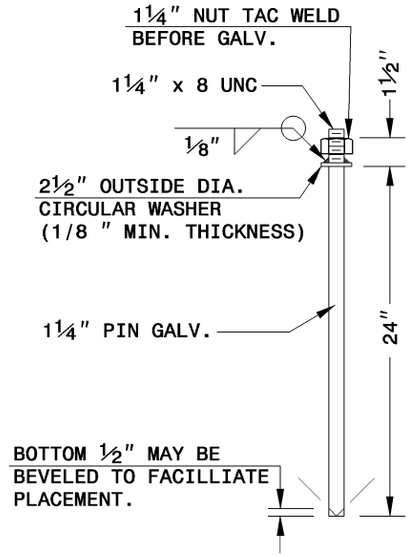

CONNECTOR PIN ASSEMBLY

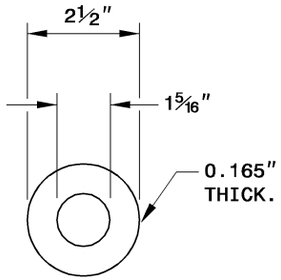

PLAIN GALVANIZED STEEL WASHER FOR 1¼" PIN

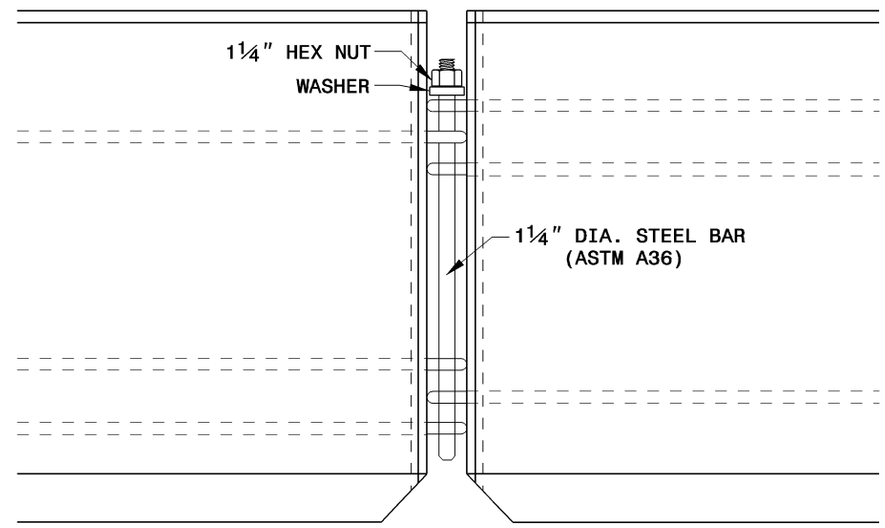

ELEVATION OF CONNECTION

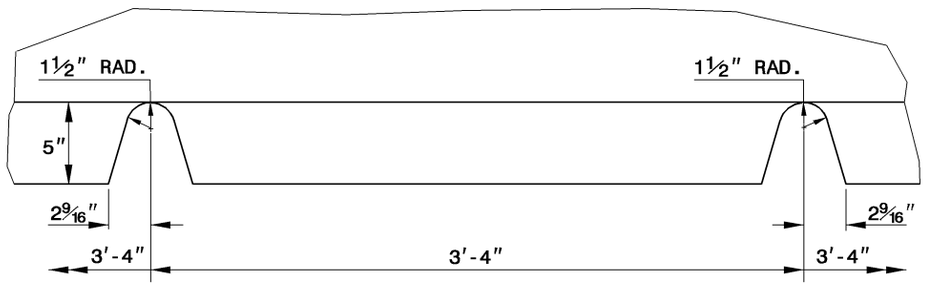

PART ELEVATION OF LIFT SLOT

SHEET 2 OF 2

854.04

STATE OF
NORTH CAROLINA
DEPT. OF TRANSPORTATION
DIVISION OF HIGHWAYS
RALEIGH, N.C.

7-06

ENGLISH STANDARD DRAWING FOR
CONCRETE MEDIAN BARRIER
PRECAST PERMANENT

SHEET 2 OF 2

854.04