STATE OF
NORTH CAROLINA
DEPT. OF TRANSPORTATION
DIVISION OF HIGHWAYS
RALEIGH, N.C.

7-06

ENGLISH STANDARD DRAWING FOR

CONCRETE MEDIAN TRANSITION BARRIER

LOCATION OF OVERHEAD ASSEMBLY

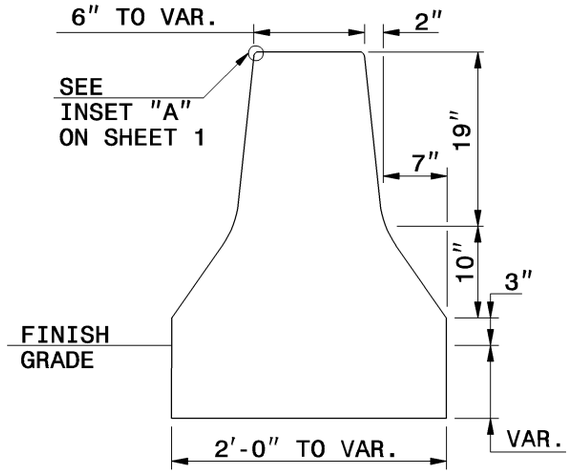

SECTION VIEW

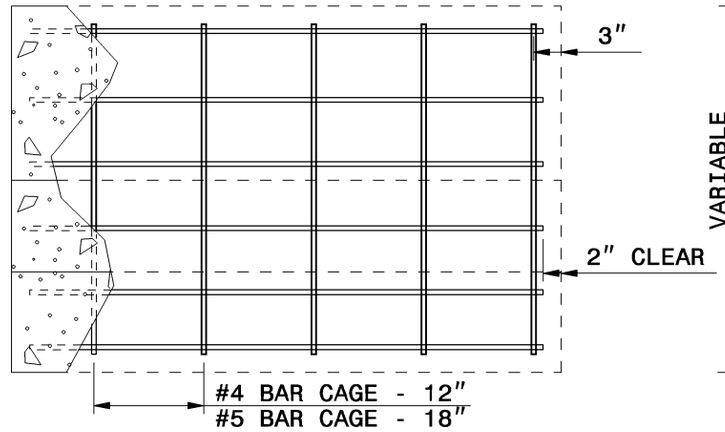

ELEVATION VIEW

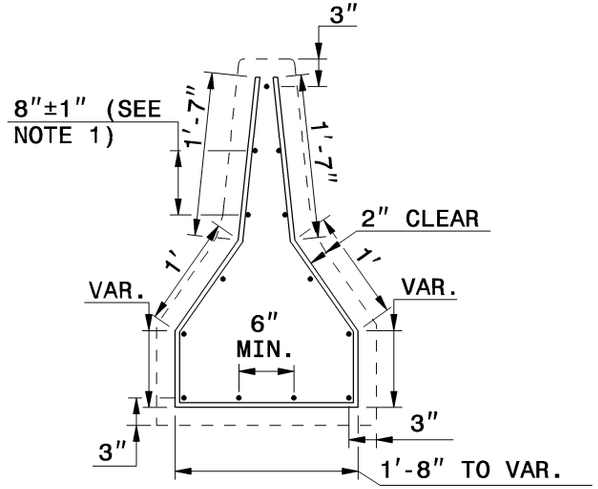

STEEL VIEW

DOUBLE FACE TRANSITION BARRIER
(NO GLARE SCREEN PERMITTED)

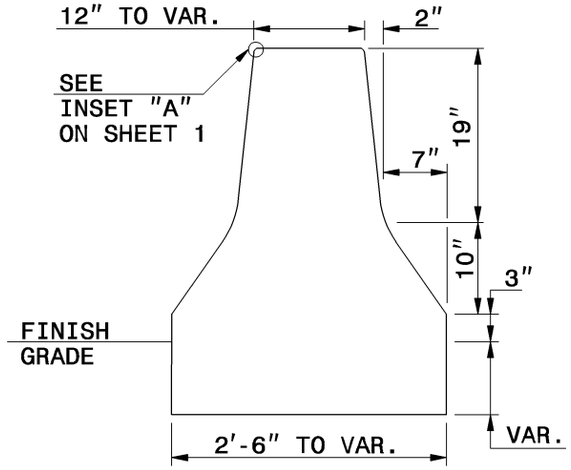

SECTION VIEW

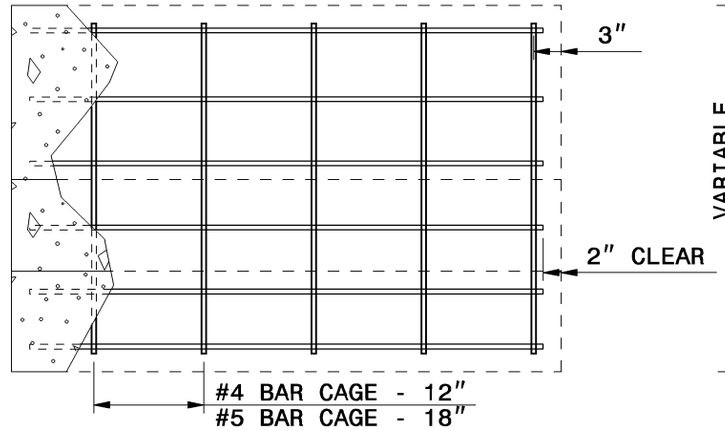

ELEVATION VIEW

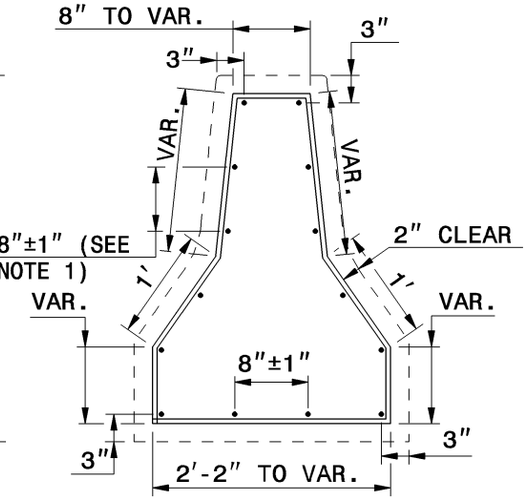

STEEL VIEW

DOUBLE FACE TRANSITION BARRIER
(GLARE SCREEN PERMITED)

NOTES:

1. EVENLY SPACE HORIZONTAL REBAR 8"±1" UNLESS OTHERWISE NOTED.
2. USE #4 BAR FOR HORIZONTAL STEEL AND #4 OR #5 BAR FOR THE VERTICAL CAGE.
3. SUBMIT CHANGES IN STEEL PLACEMENT OR SIZE TO THE ENGINEER.
4. CONSTRUCT THE TRANSITION BARRIER IN ACCORDANCE WITH SECTION 854 OF THE SPECIFICATIONS.

STATE OF
NORTH CAROLINA
DEPT. OF TRANSPORTATION
DIVISION OF HIGHWAYS
RALEIGH, N.C.

7-06

ENGLISH STANDARD DRAWING FOR

CONCRETE MEDIAN TRANSITION BARRIER

LOCATION OF OVERHEAD ASSEMBLY

SHEET 2 OF 4
854.05