STATE OF
NORTH CAROLINA
DEPT. OF TRANSPORTATION
DIVISION OF HIGHWAYS
RALEIGH, N.C.

7-06

ENGLISH STANDARD DRAWING FOR

PRECAST REINFORCED CONCRETE BARRIER

41" SINGLE FACED

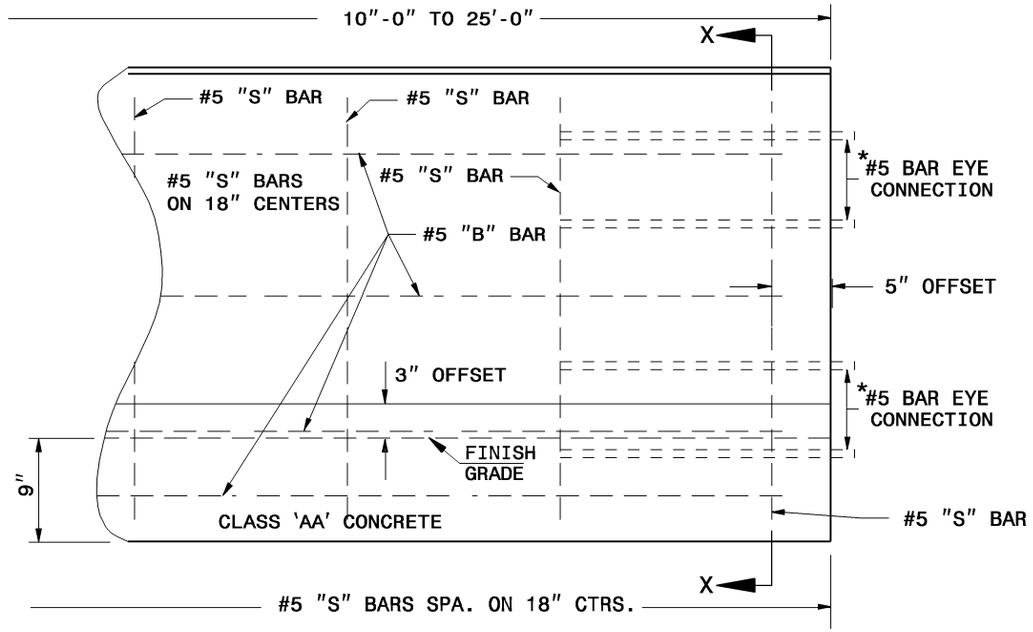

PART FRONT ELEVATION

*SEE SHEET 4
FOR DIMENSIONS

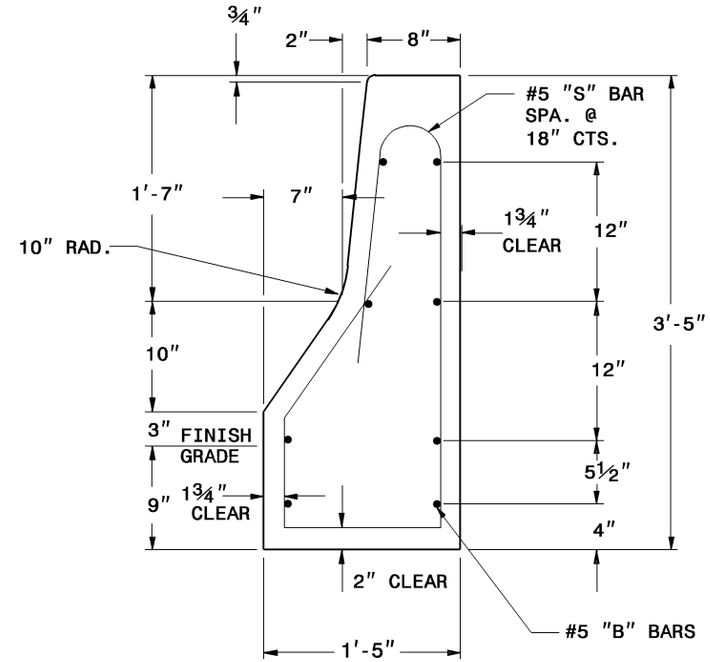

DETAIL X-X

CROSS SECTIONAL VIEW

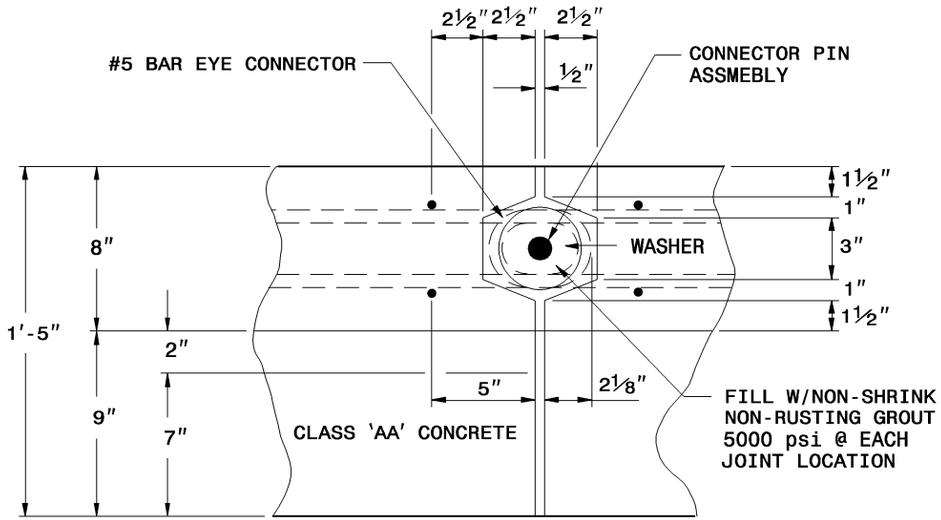

PLAN OF BONDED CONNECTION OF PRECAST UNIT

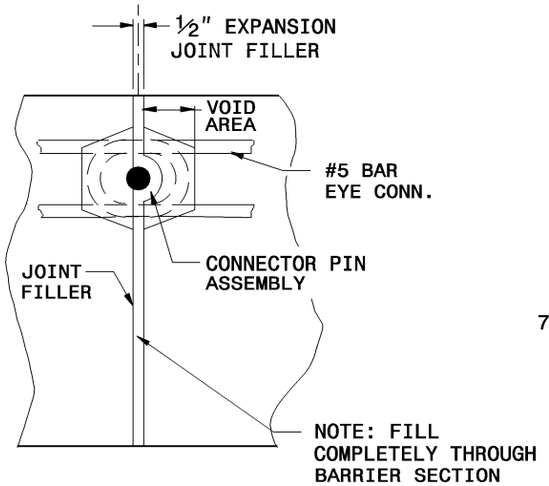

JOINT FILLER DETAIL

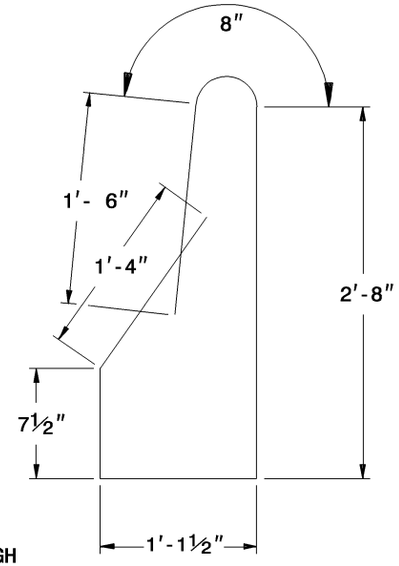

S - BARS

#5 BAR

STATE OF
NORTH CAROLINA
DEPT. OF TRANSPORTATION
DIVISION OF HIGHWAYS
RALEIGH, N.C.

7-06

ENGLISH STANDARD DRAWING FOR

PRECAST REINFORCED CONCRETE BARRIER

41" SINGLE FACED

SHEET 5 OF 8
857.01