STATE OF
NORTH CAROLINA
DEPT. OF TRANSPORTATION
DIVISION OF HIGHWAYS
RALEIGH, N.C.

7-06

ENGLISH STANDARD DRAWING FOR

PRECAST REINFORCED CONCRETE BARRIER

41″ SINGLE FACED

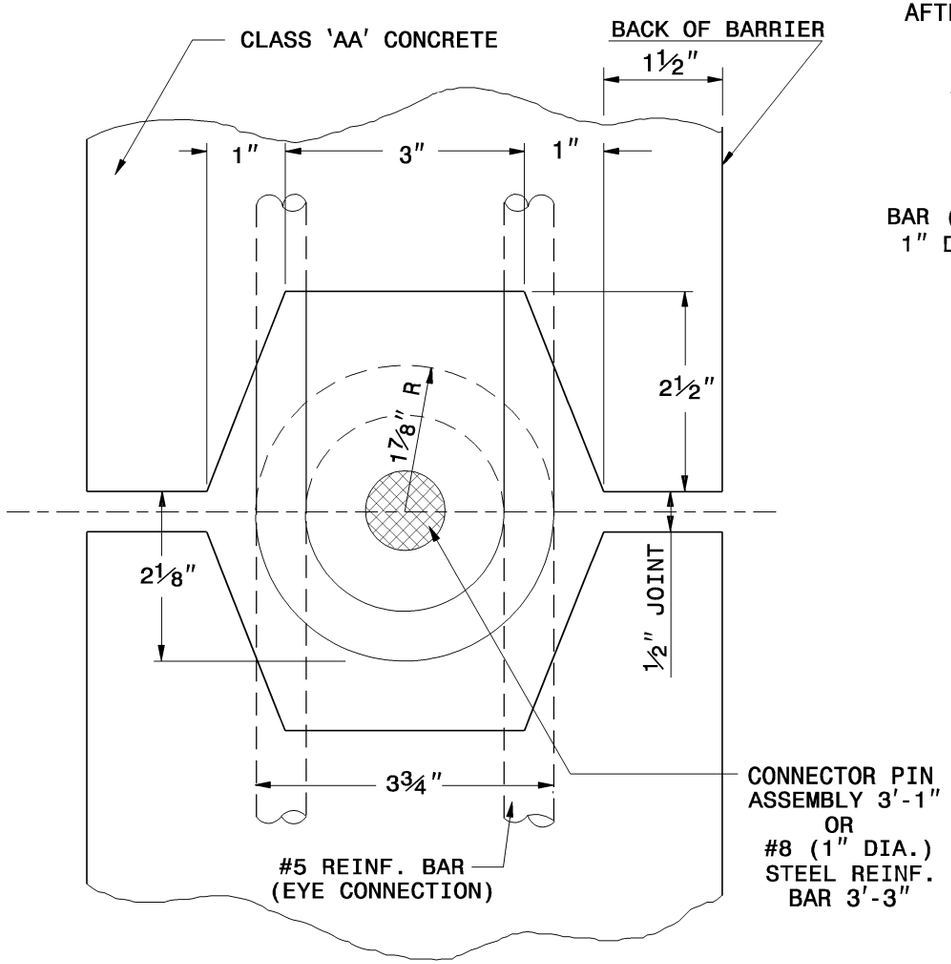

GROOVE END AND
PIN & EYE CONNECTION DETAILS

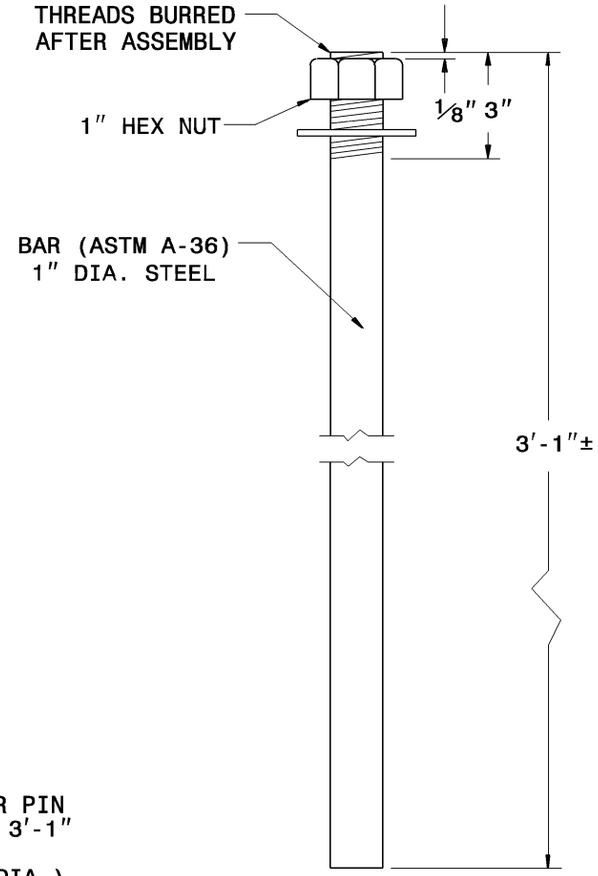

CONNECTOR PIN
ASSEMBLY

OPTION #1
GALVANIZE ALL PARTS IN ACCORDANCE
WITH ASTM A-153 SPEC.

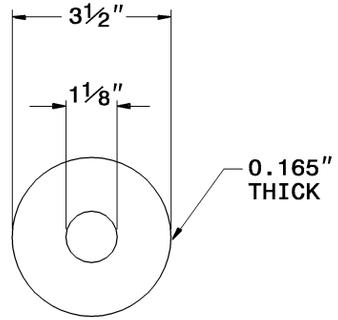

PLAIN GALVANIZED
STEEL WASHER
FOR 1″ PIN

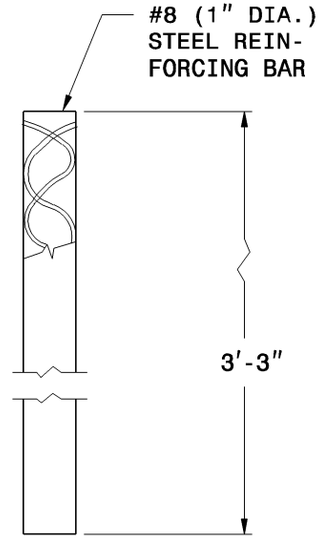

#8 REINFORCING
STEEL BAR
CONNECTOR PIN

OPTION #2
GALVANIZE ALL PARTS IN ACCORDANCE
WITH ASTM A-153 SPEC.

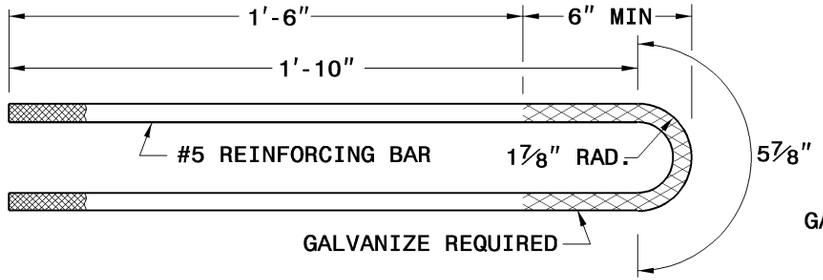

DETAIL OF REINFORCING EYE BAR

SHEET 7 OF 8

857.01

STATE OF
NORTH CAROLINA
DEPT. OF TRANSPORTATION
DIVISION OF HIGHWAYS
RALEIGH, N.C.

7-06

ENGLISH STANDARD DRAWING FOR

PRECAST REINFORCED CONCRETE BARRIER

41″ SINGLE FACED

SHEET 7 OF 8

857.01