STATE OF
NORTH CAROLINA
DEPT. OF TRANSPORTATION
DIVISION OF HIGHWAYS
RALEIGH, N.C.

7-06

ENGLISH STANDARD DRAWING FOR

GUARDRAIL · PLACEMENT

GUARDRAIL TREATMENT · AT CURB AND GUTTER

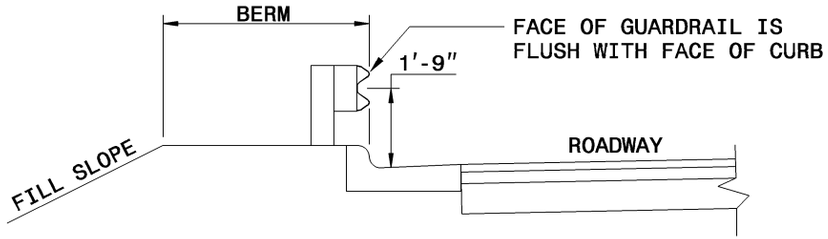

SECTION D-D

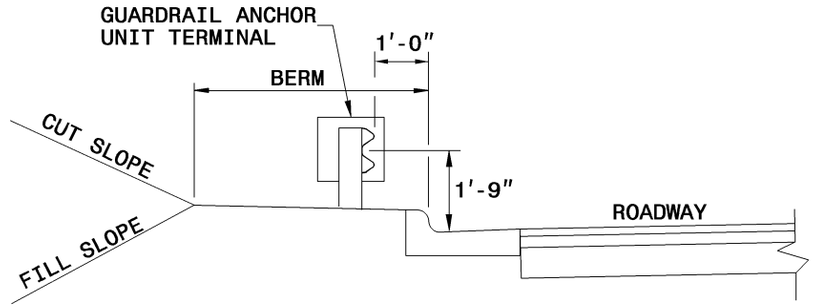

SECTION C-C

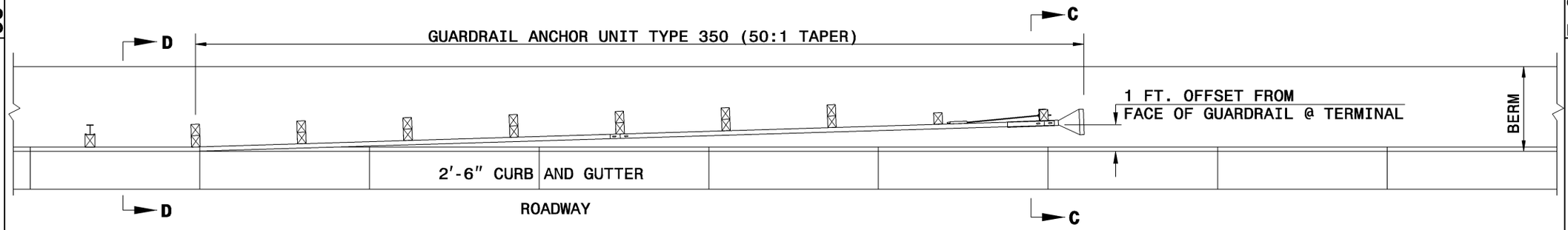

GUARDRAIL AT FACE OF CURB

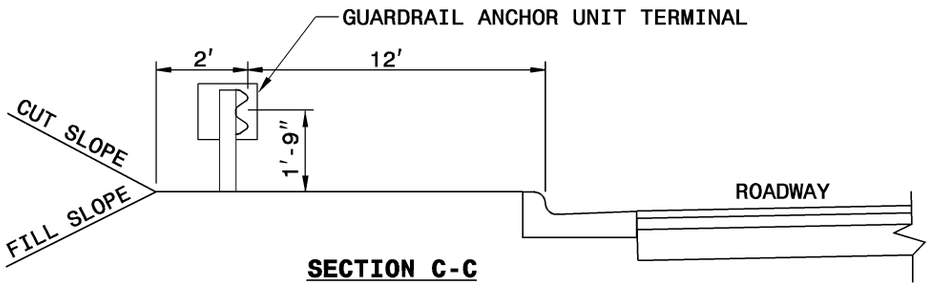

SECTION C-C

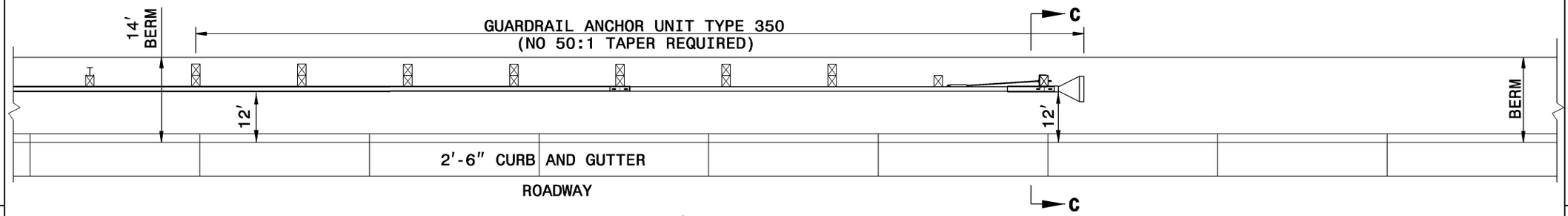

GUARDRAIL 12' OFFSET FROM FACE OF CURB

SHEET 11 OF 11

862.01

STATE OF
NORTH CAROLINA
DEPT. OF TRANSPORTATION
DIVISION OF HIGHWAYS
RALEIGH, N.C.

7-06

ENGLISH STANDARD DRAWING FOR

GUARDRAIL · PLACEMENT

GUARDRAIL TREATMENT · AT CURB AND GUTTER

SHEET 11 OF 11

862.01