STATE OF
NORTH CAROLINA
DEPT. OF TRANSPORTATION
DIVISION OF HIGHWAYS
RALEIGH, N.C.

7-06

ENGLISH STANDARD DRAWING FOR
GUARDRAIL INSTALLATION

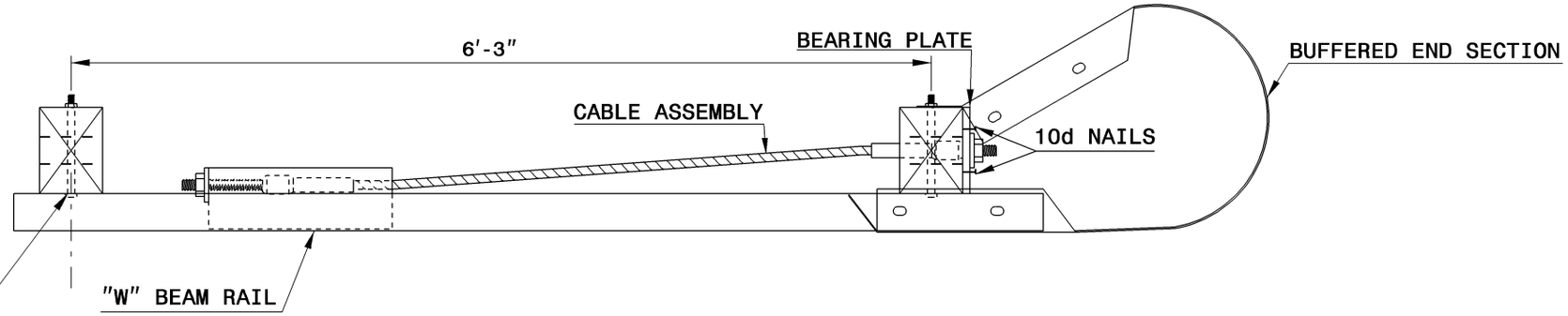

END SECTION ASSEMBLY - PLAN

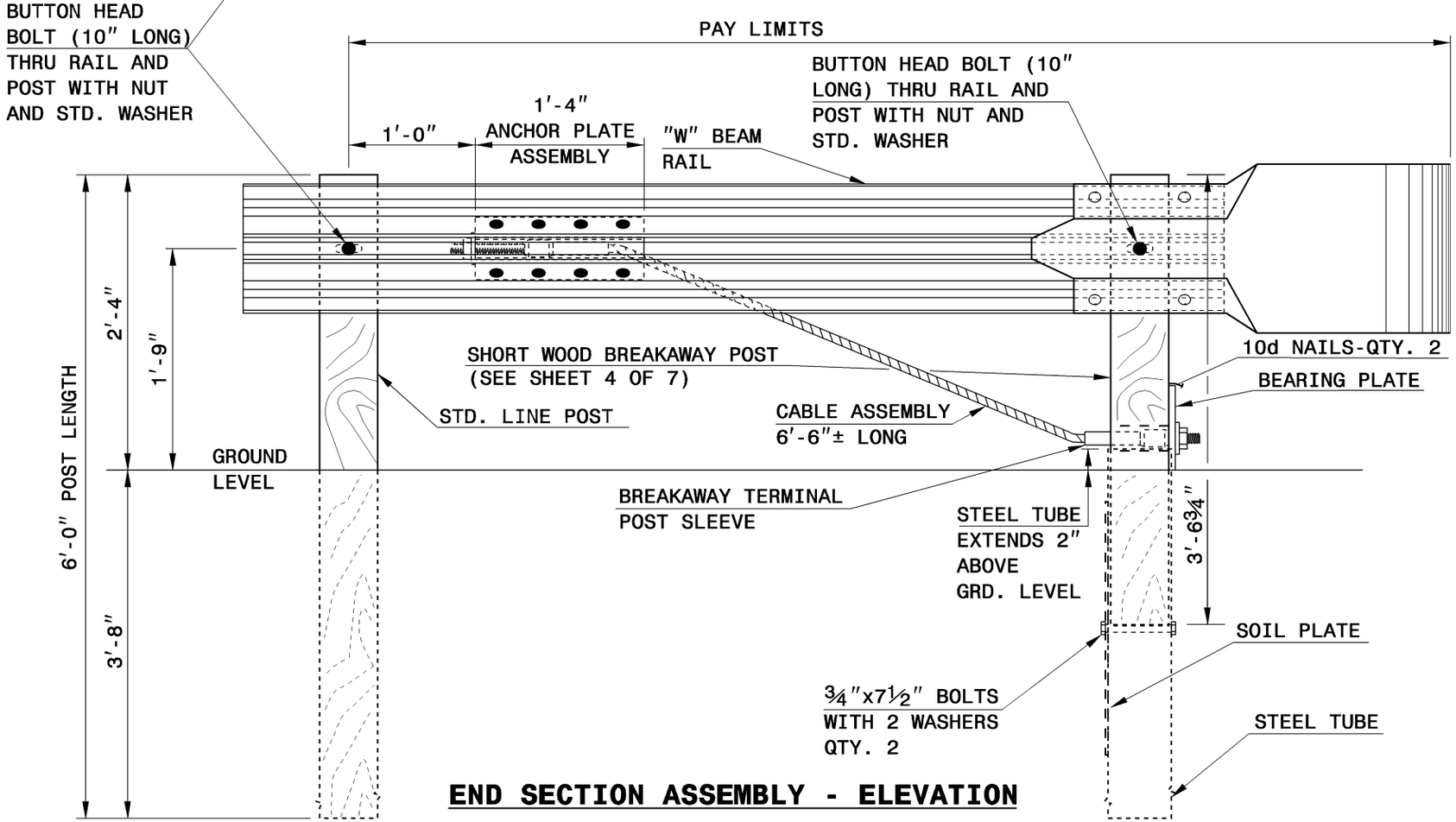

END SECTION ASSEMBLY - ELEVATION

C.A.T.-1 SYSTEM

SHEET 1 OF 7

862.02

STATE OF
NORTH CAROLINA
DEPT. OF TRANSPORTATION
DIVISION OF HIGHWAYS
RALEIGH, N.C.

7-06

ENGLISH STANDARD DRAWING FOR
GUARDRAIL INSTALLATION

SHEET 1 OF 7

862.02