STATE OF
NORTH CAROLINA
DEPT. OF TRANSPORTATION
DIVISION OF HIGHWAYS
RALEIGH, N.C.

7-06

ENGLISH STANDARD DRAWING FOR
GUARDRAIL INSTALLATION

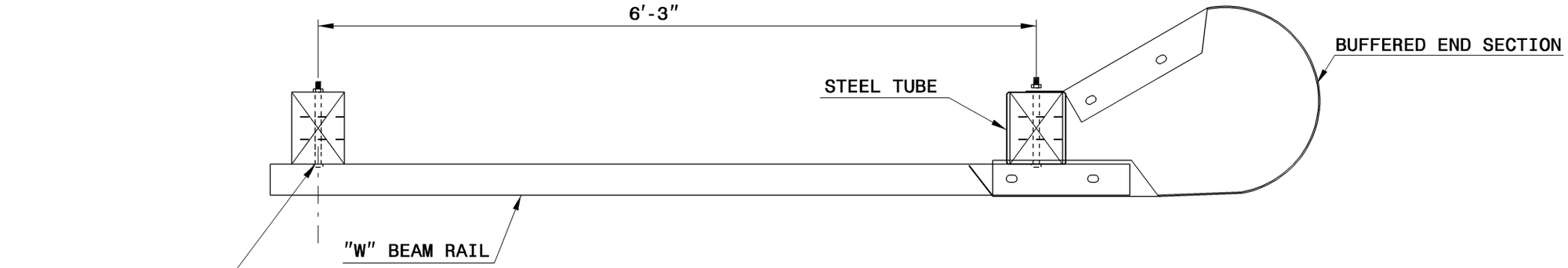

END SECTION ASSEMBLY - PLAN

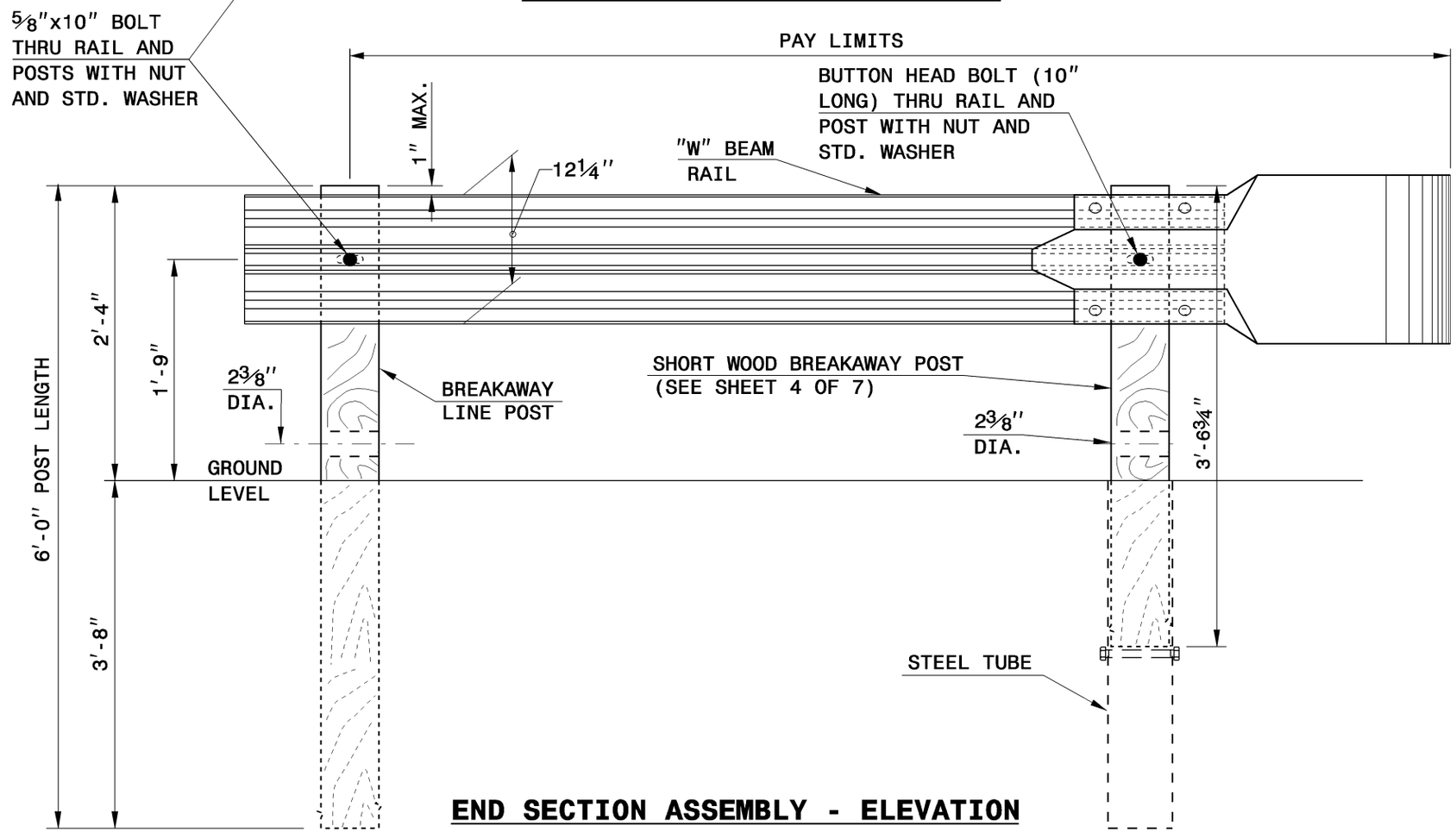

END SECTION ASSEMBLY - ELEVATION

A.T.-1 SYSTEM

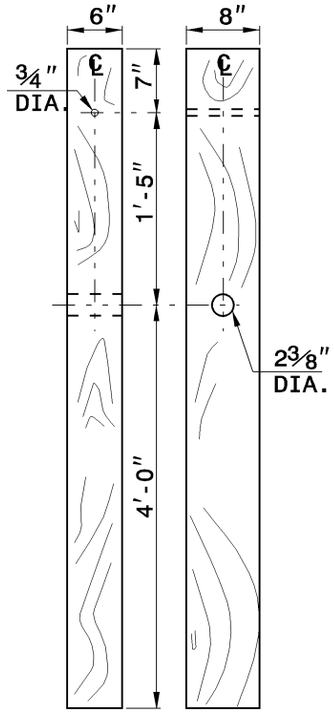

BREAKAWAY LINE POST

STATE OF
NORTH CAROLINA
DEPT. OF TRANSPORTATION
DIVISION OF HIGHWAYS
RALEIGH, N.C.

7-06

ENGLISH STANDARD DRAWING FOR
GUARDRAIL INSTALLATION

SHEET 2 OF 7
862.02