STATE OF
NORTH CAROLINA
DEPT. OF TRANSPORTATION
DIVISION OF HIGHWAYS
RALEIGH, N.C.

7-06

ENGLISH STANDARD DRAWING FOR
GUARDRAIL INSTALLATION

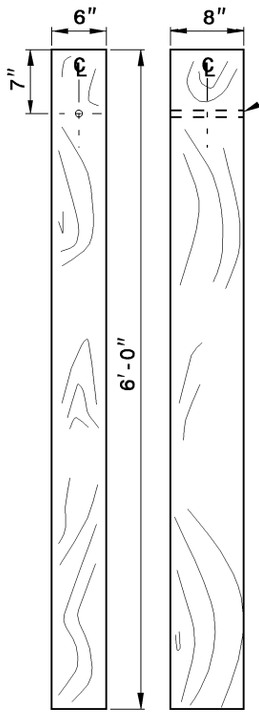

STANDARD LINE POST

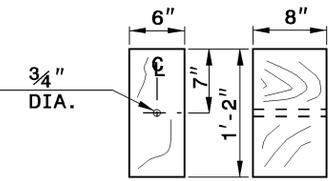

WOOD OFFSET BLOCK
(FOR WOOD POSTS)

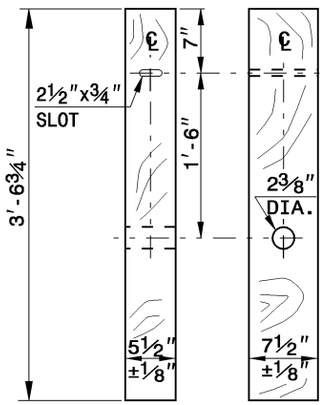

SHORT WOOD BREAKAWAY POST

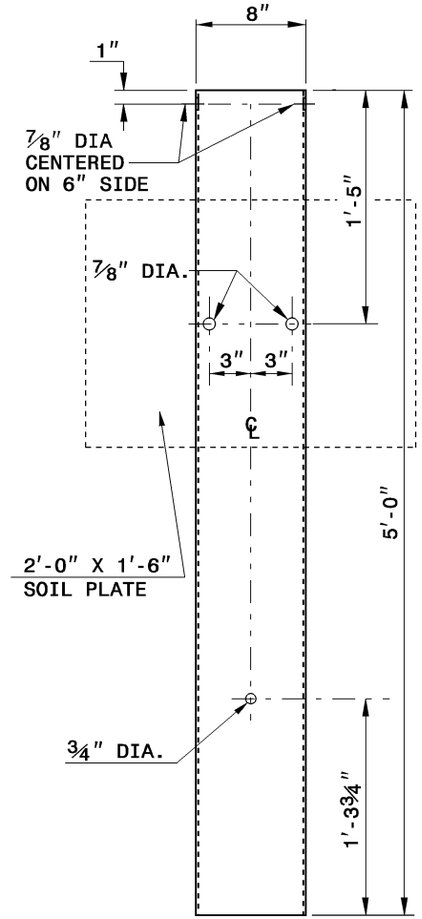

STEEL TUBE
TS 6"x8"x0.1875"

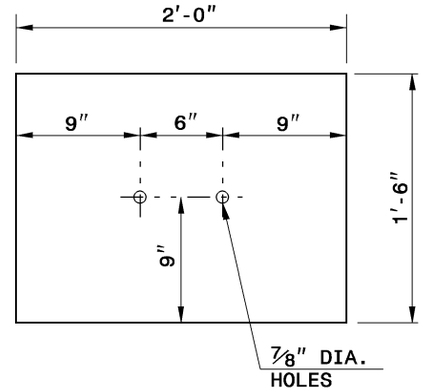

SOIL PLATE
¼" THICK PLATE

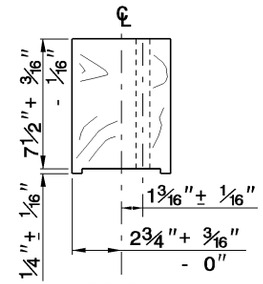

PLAN

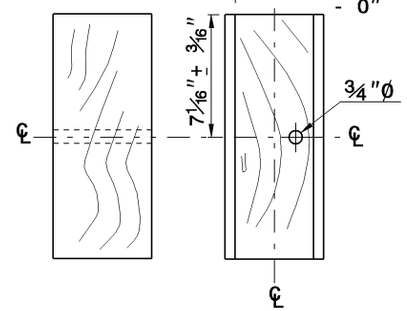

SIDE **FRONT**

ROUTED WOOD OFFSET BLOCK

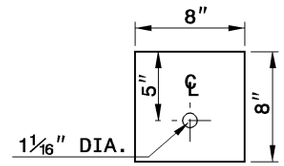

BEARING PLATE
⅝" THICK PLATE

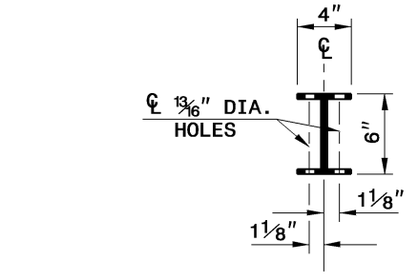

PLAN

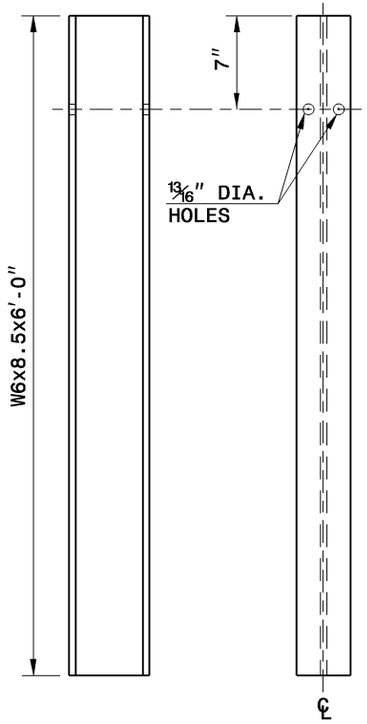

SIDE **FRONT**

"W6" STEEL POST

SYSTEM PARTS

STATE OF
NORTH CAROLINA
DEPT. OF TRANSPORTATION
DIVISION OF HIGHWAYS
RALEIGH, N.C.

7-06

ENGLISH STANDARD DRAWING FOR
GUARDRAIL INSTALLATION

SHEET 4 OF 7
862.02