STATE OF
NORTH CAROLINA
DEPT. OF TRANSPORTATION
DIVISION OF HIGHWAYS
RALEIGH, N.C.

7-06

ENGLISH STANDARD DRAWING FOR
**GUARDRAIL INSTALLATION**

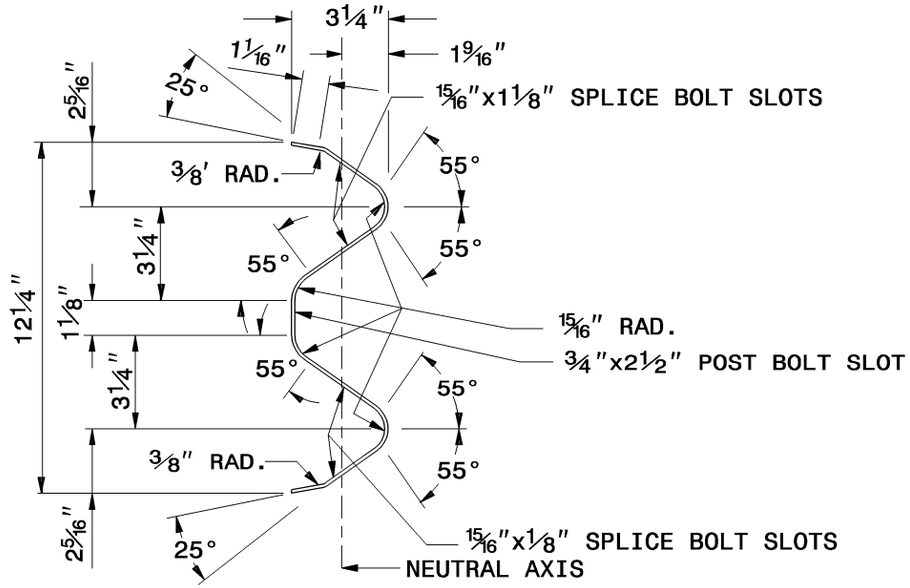


**SECTION X-X**

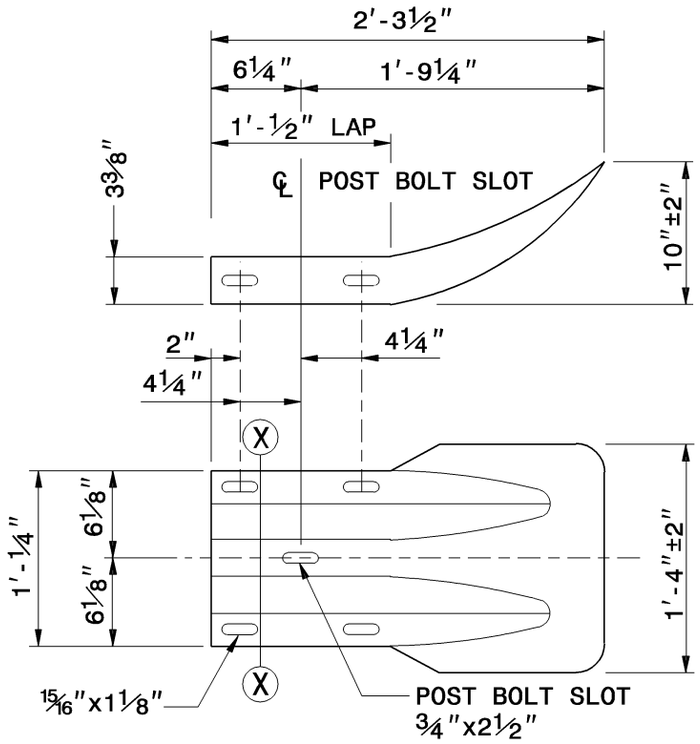


**TERMINAL END SECTION**

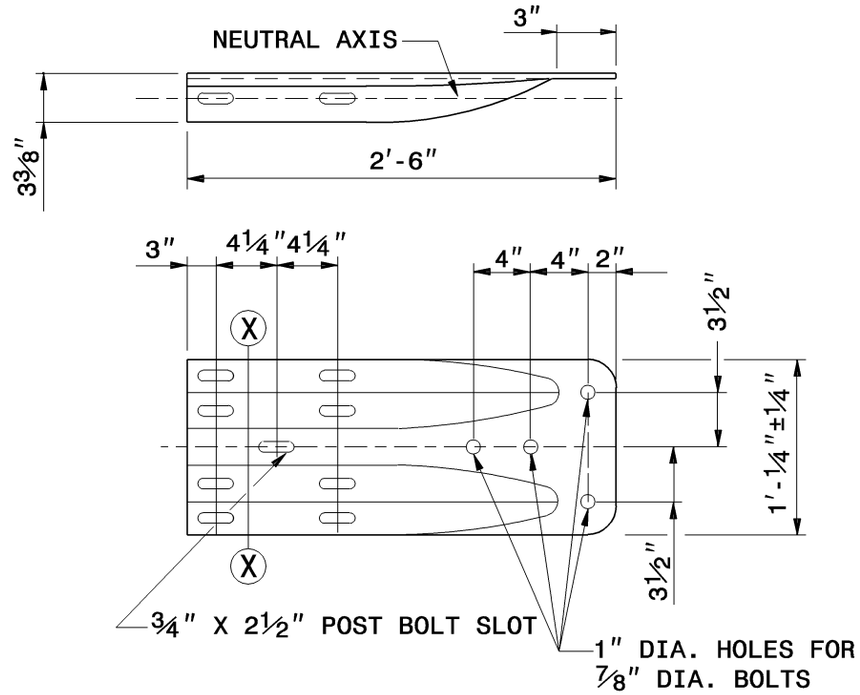


**TYPICAL END SHOE**

**SYSTEM PARTS - GENERAL USE**

SHEET 6 OF 7

**862.02**

STATE OF
NORTH CAROLINA
DEPT. OF TRANSPORTATION
DIVISION OF HIGHWAYS
RALEIGH, N.C.

7-06

ENGLISH STANDARD DRAWING FOR
**GUARDRAIL INSTALLATION**

SHEET 6 OF 7

**862.02**