STATE OF
NORTH CAROLINA
DEPT. OF TRANSPORTATION
DIVISION OF HIGHWAYS
RALEIGH, N.C.

7-06

ENGLISH STANDARD DRAWING FOR

GUARDRAIL INSTALLATION

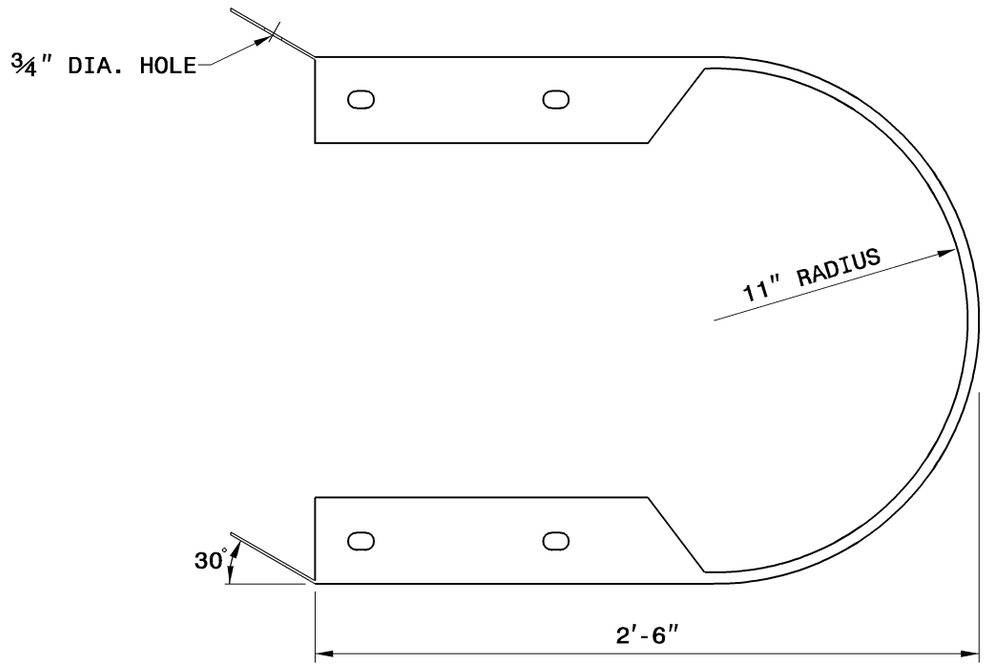

PLAN

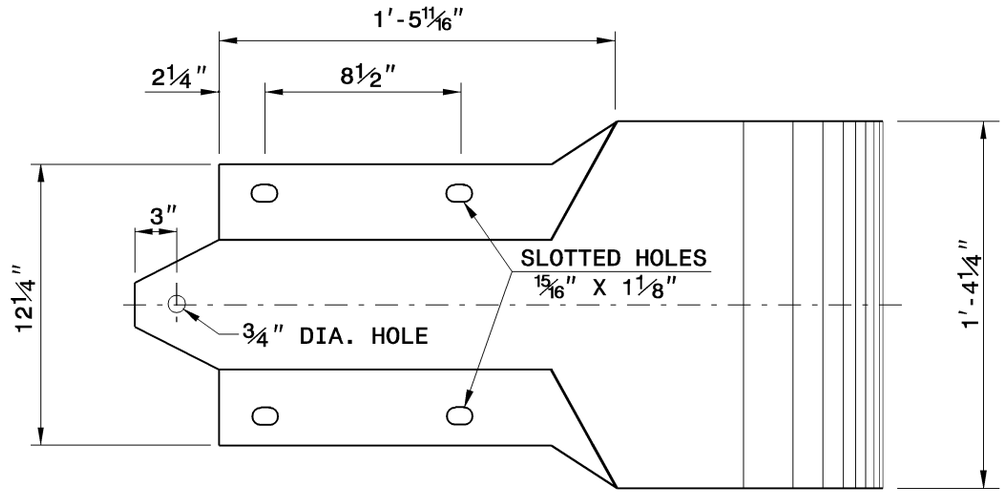

ELEVATION

BUFFERED END SECTION

SHEET 7 OF 7

862.02

STATE OF
NORTH CAROLINA
DEPT. OF TRANSPORTATION
DIVISION OF HIGHWAYS
RALEIGH, N.C.

7-06

ENGLISH STANDARD DRAWING FOR

GUARDRAIL INSTALLATION

SHEET 7 OF 7

862.02