STATE OF NORTH CAROLINA
DEPT. OF TRANSPORTATION
DIVISION OF HIGHWAYS
RALEIGH, N.C.

7-06

ENGLISH STANDARD DRAWING FOR
STRUCTURE ANCHOR UNIT
GUARDRAIL ANCHOR UNIT TYPE B-77

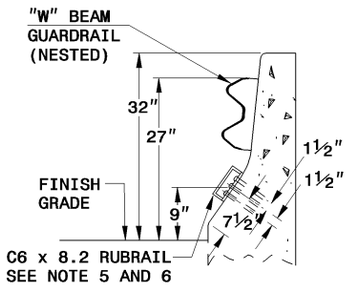

SECTION A-A

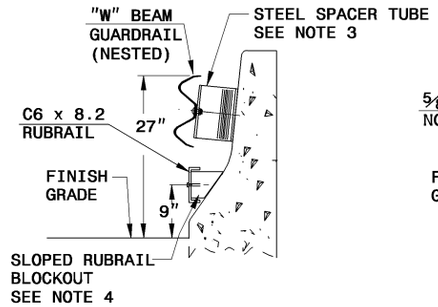

SECTION B-B

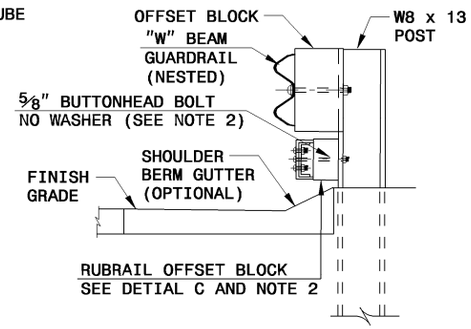

SECTION C-C

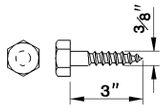

DETAIL E
LAG BOLT

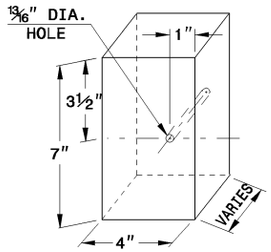

RUBRAIL BLOCKS 7" HIGH x 4" WIDE		
POST	THICKNESS	BOLT LENGTH
1	4¼"	9"
2	3¼"	5" *
3	2"	6"
4	1"	3" *

* BOLTS FOR POSTS 2 AND 4 ARE USED TO ATTACH BLOCK TO POST. RUBRAIL NOT ATTACHED TO BLOCK.

DETAIL C
RUBRAIL BLOCKOUT

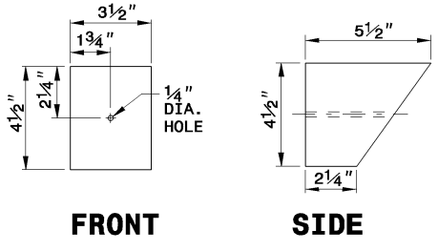

DETAIL D
SLOPED RUBRAIL BLOCKOUT

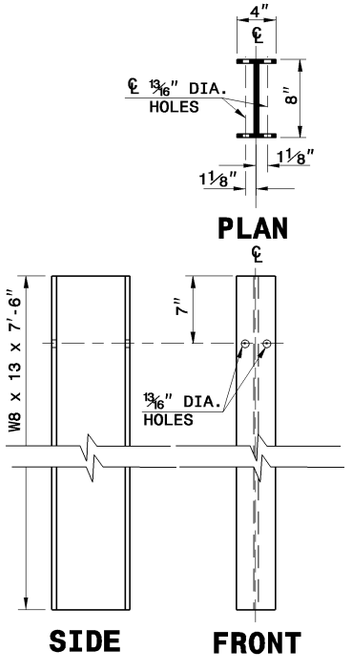

DETAIL F STEEL POST
"W8 X 13 X 7'-6"

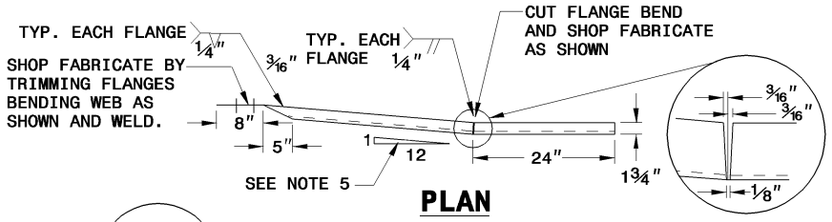

PLAN

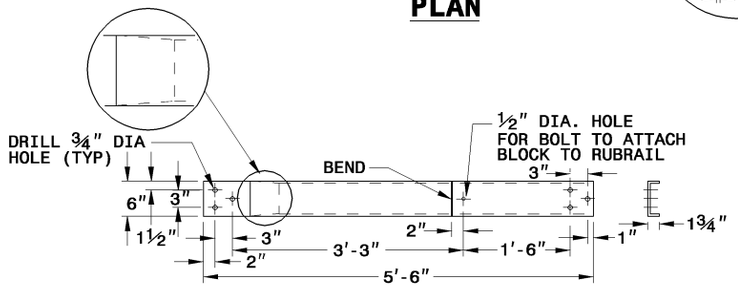

ELEVATION

DETAIL A
C6 x 8.2 RUBRAIL

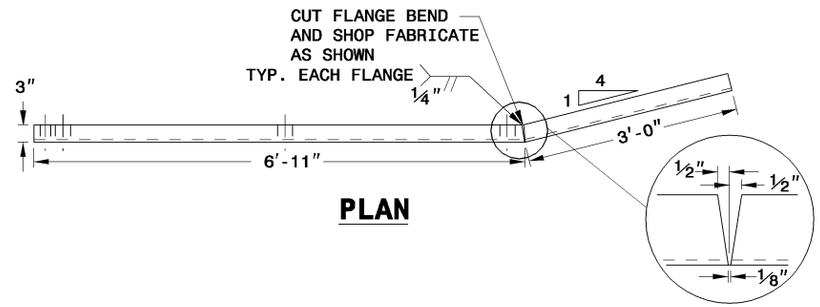

PLAN

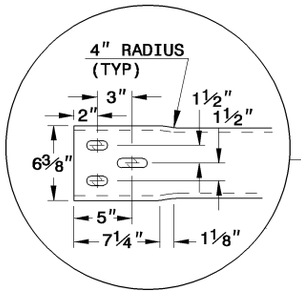

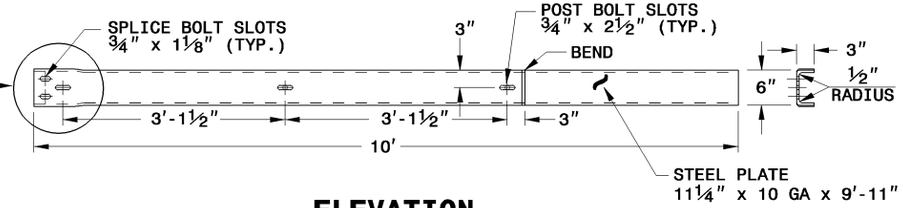

ELEVATION

DETAIL B
BENT PLATE RUBRAIL

GUARDRAIL ANCHOR UNIT TYPE B-77

SHEET 7 OF 9
862.03

STATE OF NORTH CAROLINA
DEPT. OF TRANSPORTATION
DIVISION OF HIGHWAYS
RALEIGH, N.C.

7-06

ENGLISH STANDARD DRAWING FOR
STRUCTURE ANCHOR UNIT
GUARDRAIL ANCHOR UNIT TYPE B-77

SHEET 7 OF 9
862.03