STATE OF NORTH CAROLINA
DEPT. OF TRANSPORTATION
DIVISION OF HIGHWAYS
RALEIGH, N.C.

7-06

ENGLISH STANDARD DRAWING FOR
STRUCTURE ANCHOR UNITS
GUARDRAIL ANCHOR UNIT TYPE B-83

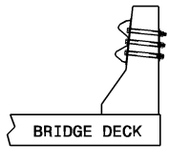

SECTION A-A

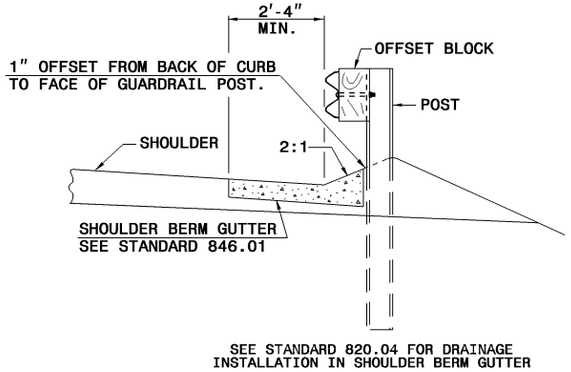

SECTION B-B

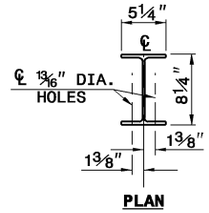

PLAN

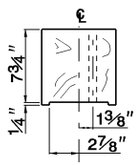

PLAN

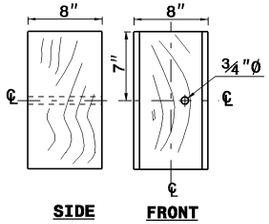

8"X 8"X 14" ROUTED WOOD OFFSET BLOCK

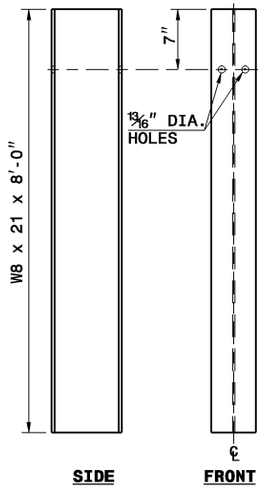

"W8 X 21 X 8'-0" STEEL POST

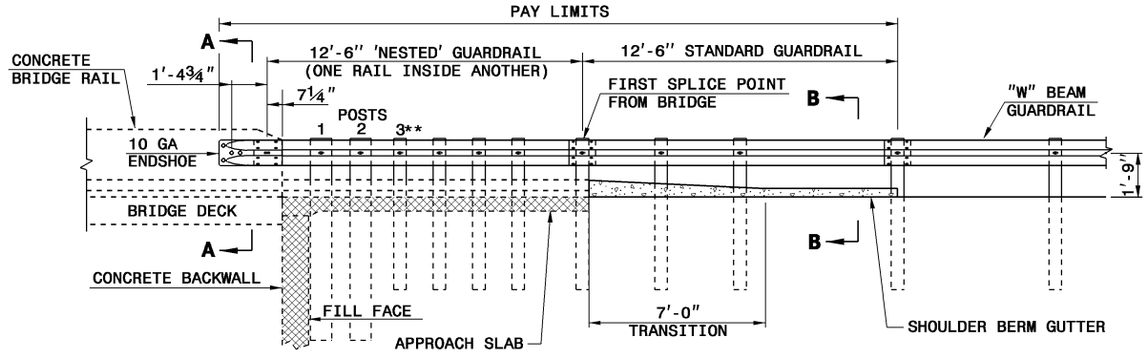

ELEVATION VIEW

NOTE:
- **ELIMINATE POST 3 AND SHIFT POSTS 1 & 2 ON SKEW ANGLES GREATER THAN 150° OR LESS THAN 30° UNLESS OTHERWISE DIRECTED BY THE ENGINEER.
- *THE DISTANCE FROM END OF BRIDGE RAIL TO CENTER LINE OF THE FIRST POST SHOULD BE 11½" IF CONCRETE BACKWALL IS NOT PRESENT.
- -MEASURE GUARDRAIL HEIGHT FROM THE TOP OF ADJACENT SURFACE (SHOULDER, BERM, OR GUTTER).
- -USE NO WOOD POSTS WITHIN THE GUARDRAIL ANCHOR UNIT LIMITS.
- -LAP JOINTS IN THE DIRECTION OF TRAFFIC FLOW.
- -POSTS 1 AND 2 TO BE W8 x 21 X 8'-0" LONG STEEL POST AND 8" X 8" X 14" WOOD ROUTED OFFSET BLOCK.
- -SHOULDER BERM GUTTER IS REQUIRED IF NO CURBING EXISTS THROUGH ANCHOR UNIT PAY LIMITS.
- -ANCHOR THE W-BEAM END SHOE USING A 4 BOLT HOLD DOWN PLATE AS SHOWN IN STANDARD 862.04

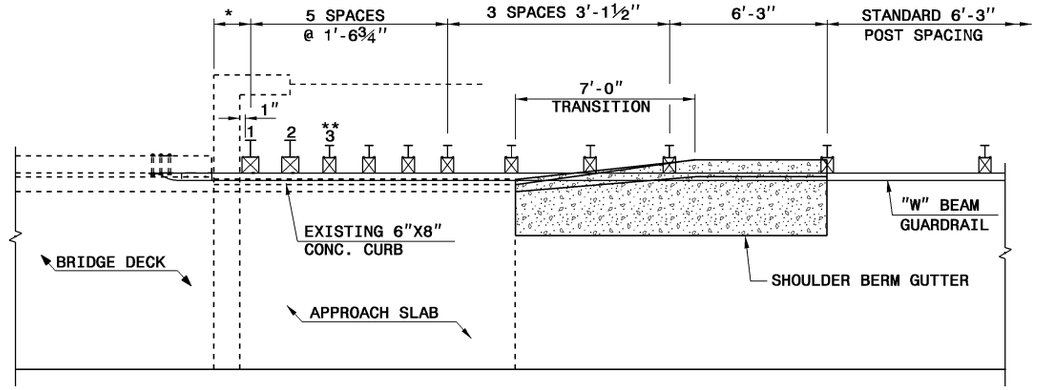

PLAN VIEW

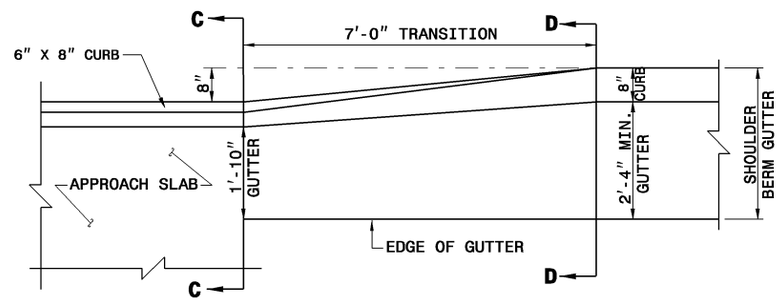

TRANSITION APPROACH SLAB CURB TO SHOULDER BERM GUTTER

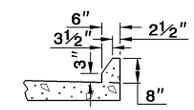

SECTION C-C
APPROACH SLAB CURB

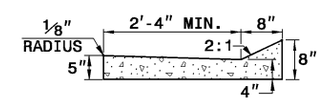

SECTION D-D
SHOULDER BERM GUTTER

GUARDRAIL ANCHOR UNIT TYPE B-83

STATE OF NORTH CAROLINA
DEPT. OF TRANSPORTATION
DIVISION OF HIGHWAYS
RALEIGH, N.C.

7-06

ENGLISH STANDARD DRAWING FOR
STRUCTURE ANCHOR UNITS
GUARDRAIL ANCHOR UNIT TYPE B-83

SHEET 8 OF 9
862.03