STATE OF
NORTH CAROLINA
DEPT. OF TRANSPORTATION
DIVISION OF HIGHWAYS
RALEIGH, N.C.

7-06

ENGLISH STANDARD DRAWING FOR

CABLE GUIDERAIL

SINGLE FACE GUIDERAIL - POST DETAILS

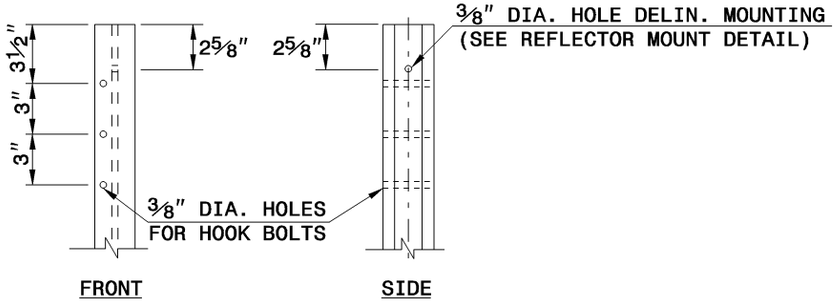

SINGLE FACE GUIDERAIL POST
HOLE PLACEMENT DETAIL

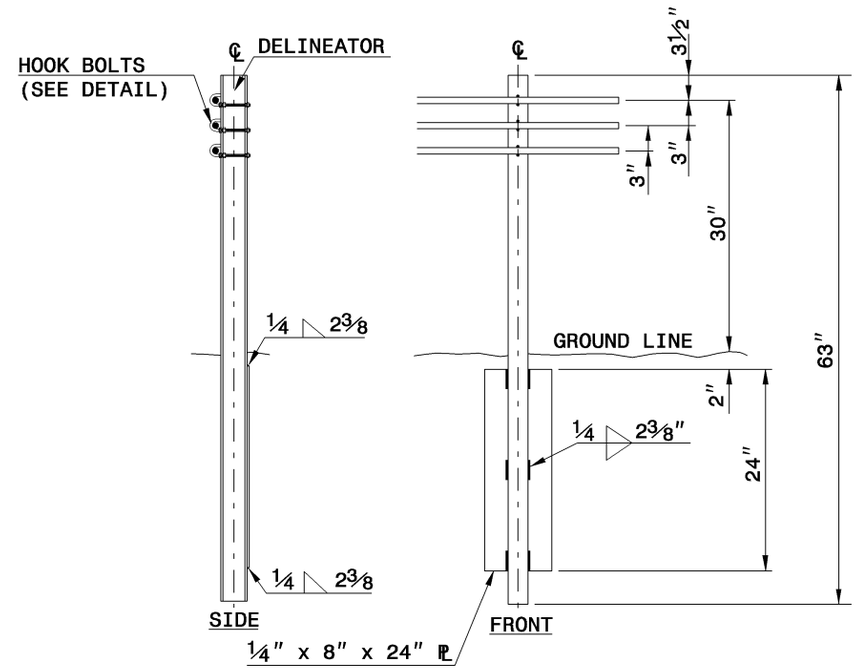

SINGLE FACE GUIDERAIL
INTERMEDIATE POST

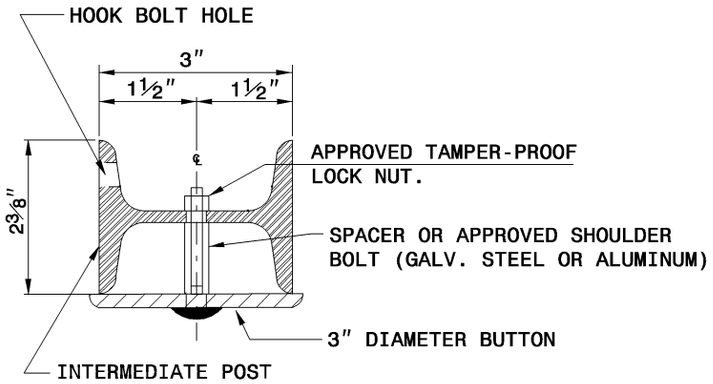

REFLECTOR MOUNT DETAIL
PLAN VIEW

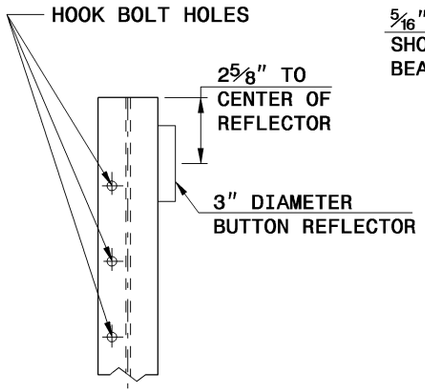

REFLECTOR MOUNT DETAIL
ELEVATION VIEW

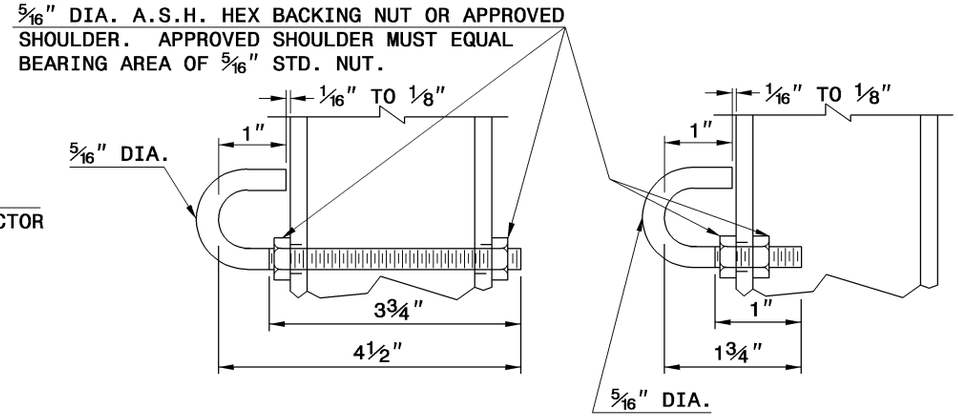

HOOK BOLT (ALTERNATES)

SHEET 7 OF 12

865.01

STATE OF
NORTH CAROLINA
DEPT. OF TRANSPORTATION
DIVISION OF HIGHWAYS
RALEIGH, N.C.

7-06

ENGLISH STANDARD DRAWING FOR

CABLE GUIDERAIL

SINGLE FACE GUIDERAIL - POST DETAILS

SHEET 7 OF 12

865.01