STATE OF
NORTH CAROLINA
DEPT. OF TRANSPORTATION
DIVISION OF HIGHWAYS
RALEIGH, N.C.

7-06

ENGLISH STANDARD DRAWING FOR

CABLE GUIDERAIL

ANCHOR POST DETAILS

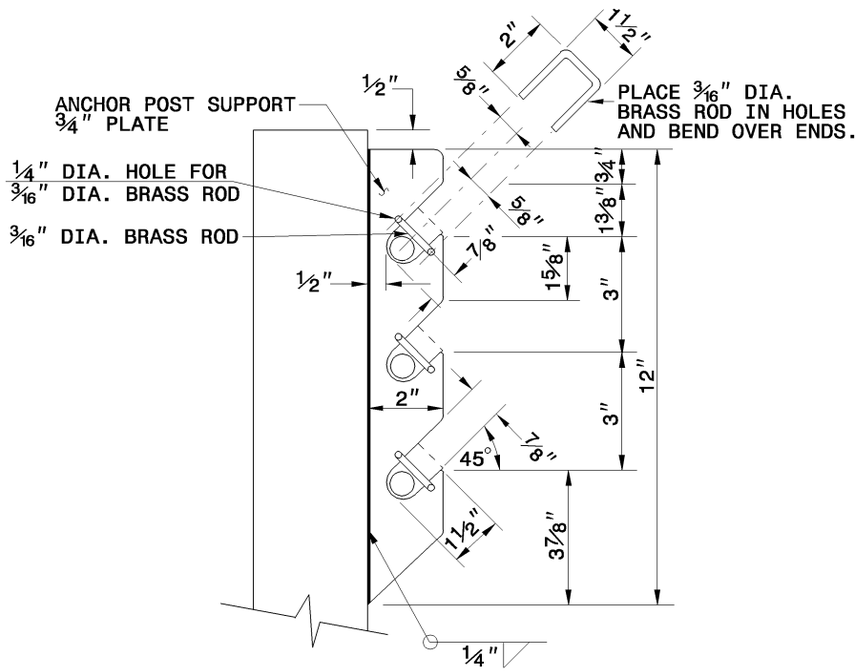

SIDE VIEW OF POST TOP

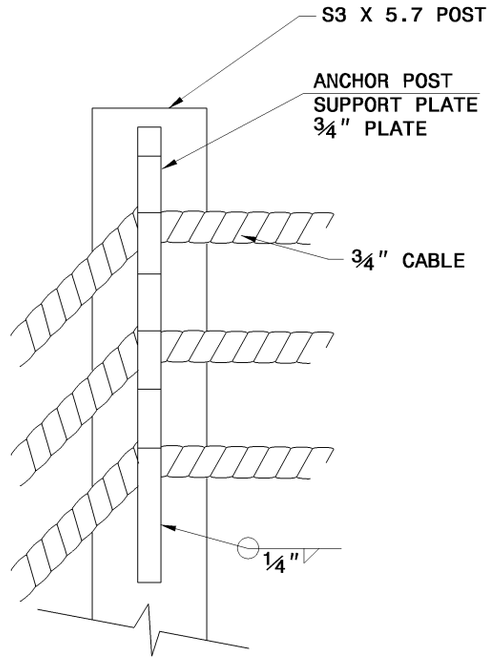

FRONT VIEW OF POST TOP

(ROAD SIDE)

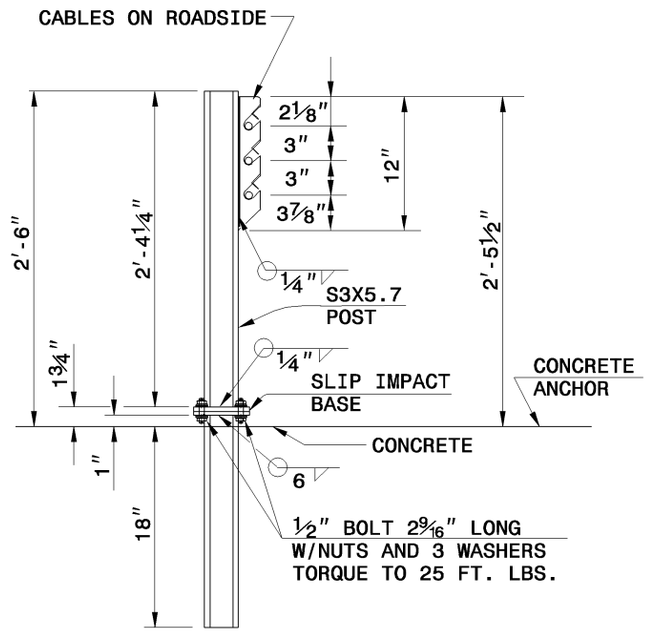

ANCHOR POST DETAIL

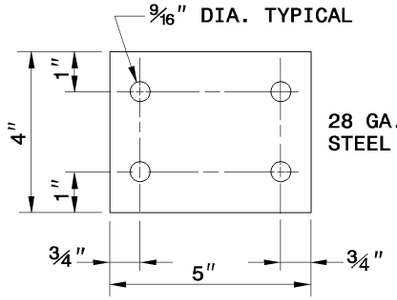

KEEPER PLATE

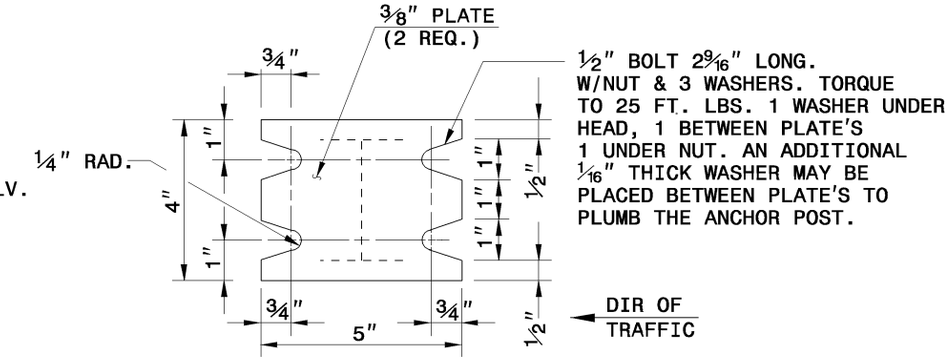

SLIP IMPACT BASE

(KEEPER PLATE NOT SHOWN)

SHEET 8 OF 12

865.01

STATE OF
NORTH CAROLINA
DEPT. OF TRANSPORTATION
DIVISION OF HIGHWAYS
RALEIGH, N.C.

7-06

ENGLISH STANDARD DRAWING FOR

CABLE GUIDERAIL

ANCHOR POST DETAILS

SHEET 8 OF 12

865.01