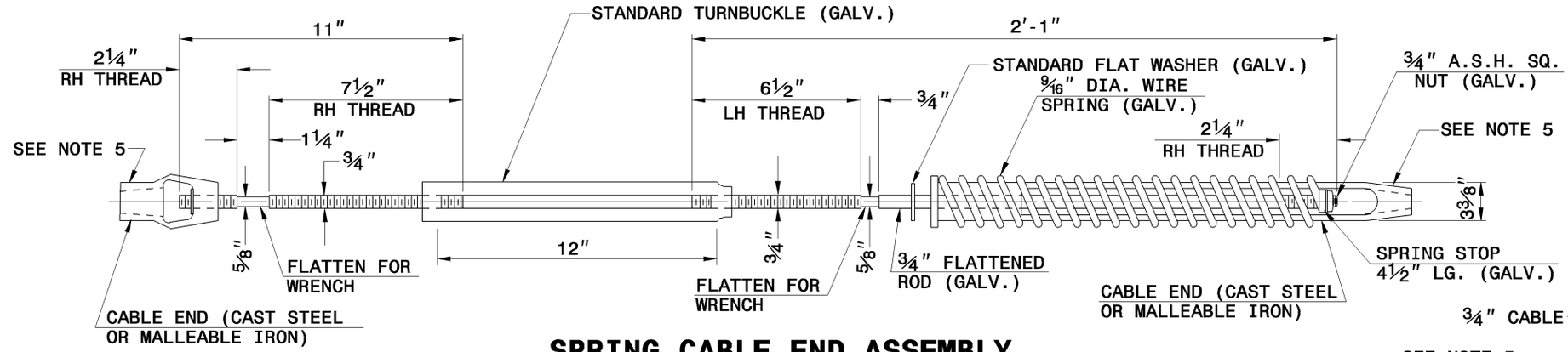

SPRING CABLE END ASSEMBLY (COMPENSATING DEVICE)

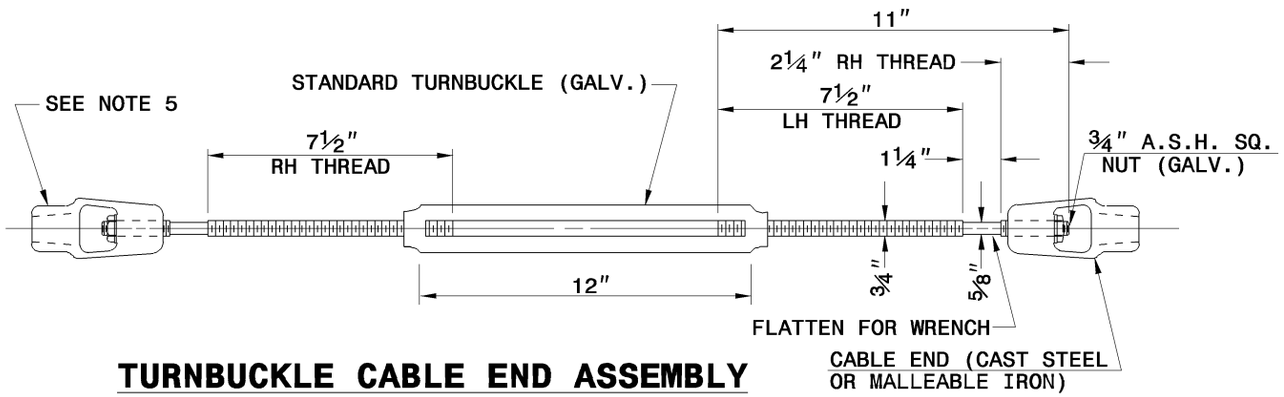

TURNBUCKLE CABLE END ASSEMBLY

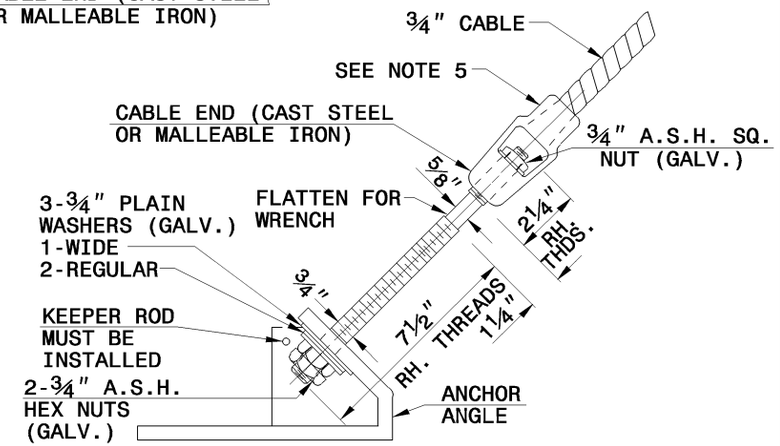

CABLE END ASSEMBLY TO ANCHOR ANGLE DETAIL

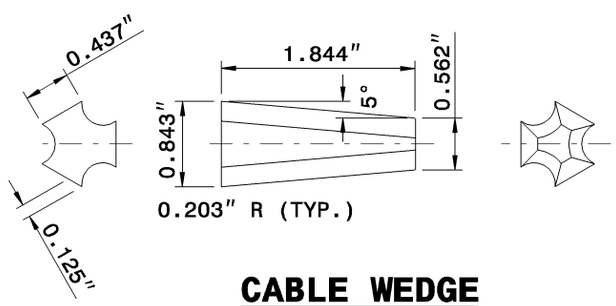

CABLE WEDGE

TYPICAL WEDGE FOR ALL SPLICES AND CABLE FITTINGS

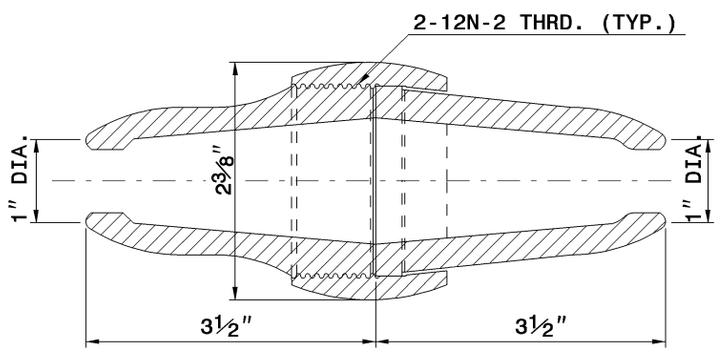

CABLE SPLICE

NOTE: USE WITH WEDGE

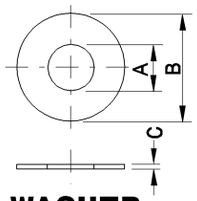

WASHER

WASHER	WASHER SERIES	A INSIDE DIA.	B OUTSIDE DIA.	C THICKNESS
¾"	REGULAR	⅞"	2"	5/32"
	WIDE	⅞"	2 9/16"	3/16"
½"	NARROW	17/32"	1"	3/32"

ENGLISH STANDARD DRAWING FOR
CABLE GUIDERAIL
ANCHOR DETAILS

STATE OF
NORTH CAROLINA
DEPT. OF TRANSPORTATION
DIVISION OF HIGHWAYS
RALEIGH, N.C.
7-06
ENGLISH STANDARD DRAWING FOR
CABLE GUIDERAIL
ANCHOR DETAILS
SHEET 11 OF 12
865.01