STATE OF
NORTH CAROLINA
DEPT. OF TRANSPORTATION
DIVISION OF HIGHWAYS
RALEIGH, N.C.

7-06

ENGLISH STANDARD DRAWING FOR

CHAIN LINK FENCE

4', 5' AND 6' HIGH FENCE

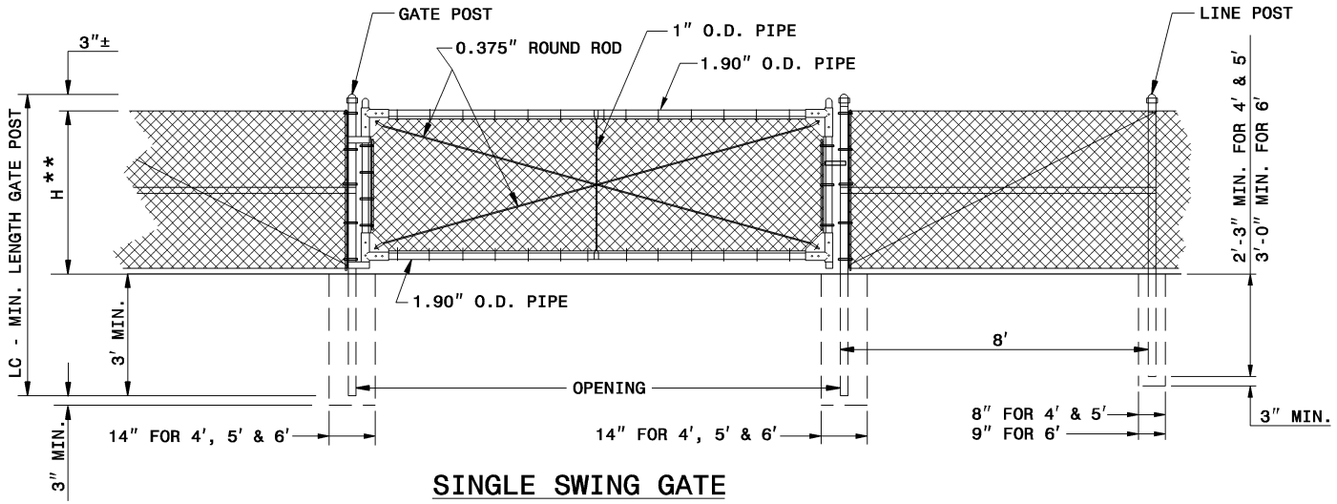

SINGLE SWING GATE

NOTE:
FENCE HARDWARE VARIES DUE TO
DIFFERING MANUFACTURES SUPPLIES.

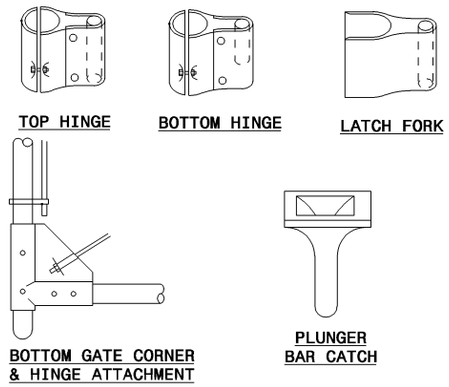

**"H" IS THE HEIGHT OF FENCE. SEE PAY ITEM DESCRIPTION FOR REQ'D HEIGHT FOR PROJECT.

NOTE: ROLL FORMED LINE POST MAY BE DRIVEN TO A MINIMUM OF 3'-0" IN LIEU OF CONCRETE ANCHOR, UNLESS OTHERWISE DIRECTED BY THE ENGINEER.

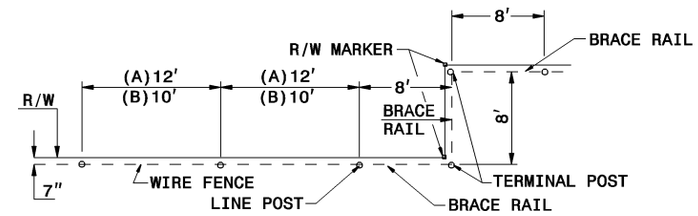

PLAN

PLACEMENT OF FENCE ALONG RIGHT OF WAY
(BRACE ALL TERMINAL POSTS AS SHOWN ABOVE)

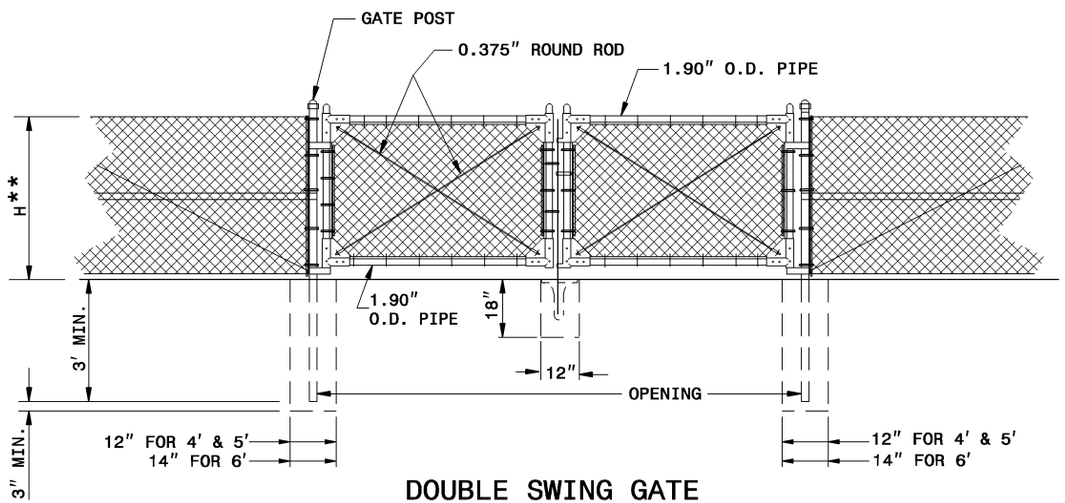

DOUBLE SWING GATE

USE WHERE SWINGING CLEARANCE IS LIMITED

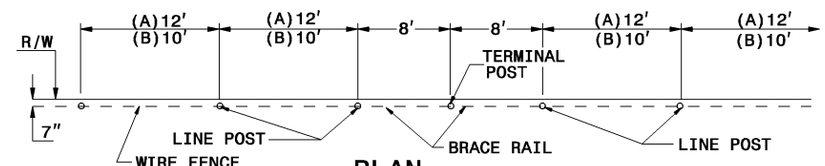

PLAN

(LINE POST/TERMINAL POST SEQUENCE)

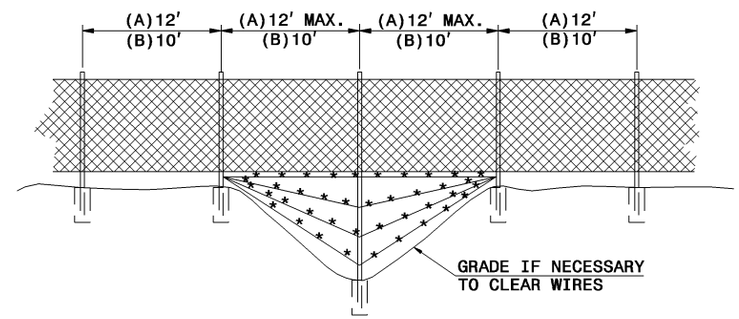

DETAIL OF DITCH CROSSING

MAXIMUM WIRE SPACING TO BE 6".
MAXIMUM CLEARANCE BETWEEN LOWEST STRAND AND GROUND TO BE 6".
ERECT BRACE RAILS BETWEEN TERMINAL OR GATE POSTS AT INTERVALS NOT EXCEEDING 700' ON TANGENTS OR 350' ON SHORT RADIUS CURVES.
ERECT ADDTIONAL TERMINAL POSTS IF DIRECTED BY THE ENGINEER.
BRACE TERMINAL POSTS FROM BOTH SIDES OF POST.

STATE OF
NORTH CAROLINA
DEPT. OF TRANSPORTATION
DIVISION OF HIGHWAYS
RALEIGH, N.C.

7-06

ENGLISH STANDARD DRAWING FOR

CHAIN LINK FENCE

4', 5' AND 6' HIGH FENCE

SHEET 2 OF 3
866.01