STATE OF
NORTH CAROLINA
DEPT. OF TRANSPORTATION
DIVISION OF HIGHWAYS
RALEIGH, N.C.

7-06

ENGLISH STANDARD DRAWING FOR
WOVEN WIRE FENCE
WITH STEEL POST

GENERAL NOTES:

ISNTALL THE FENCE FACING THE PROPERTY OWNER EXCEPT ON HORIZONTAL CURVES GREATER THAN THREE DEGREES, INSTALL THE FENCE TO PULL AGAINST ALL POSTS.

IN LIEU OF 2.375" O.D. TUBULAR POSTS 2½" x 2½" x¼" ANGLE SECTIONS MAY BE USED.

IN LIEU OF 1.660" O.D. TUBULAR BRACES 2" x 2" x¼" ANGLE SECTIONS MAY BE USED.

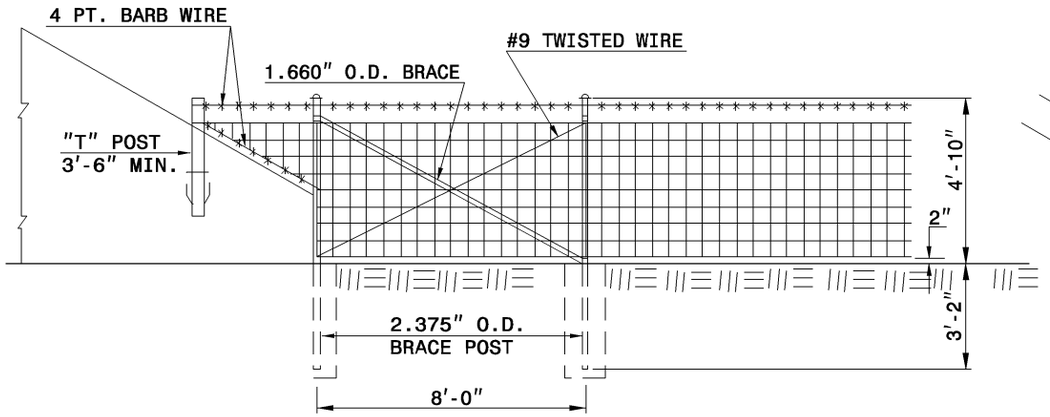

ELEVATION

METHOD OF TIEING FENCE TO HEADWALL

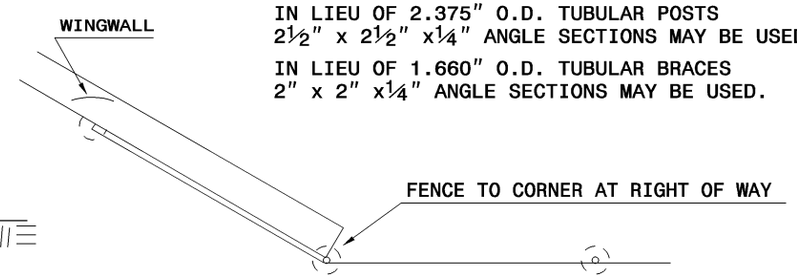

PLAN

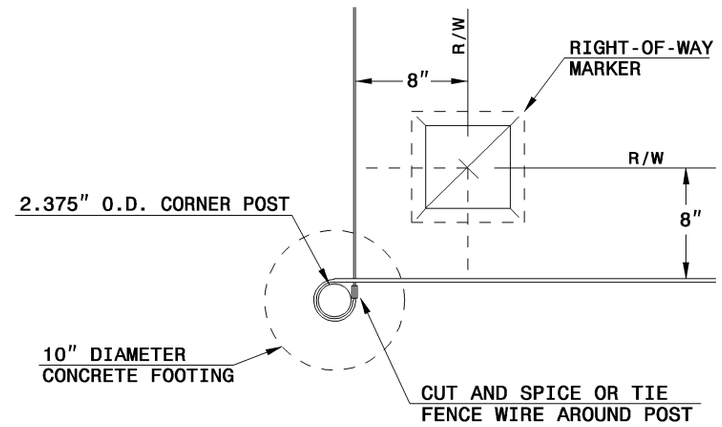

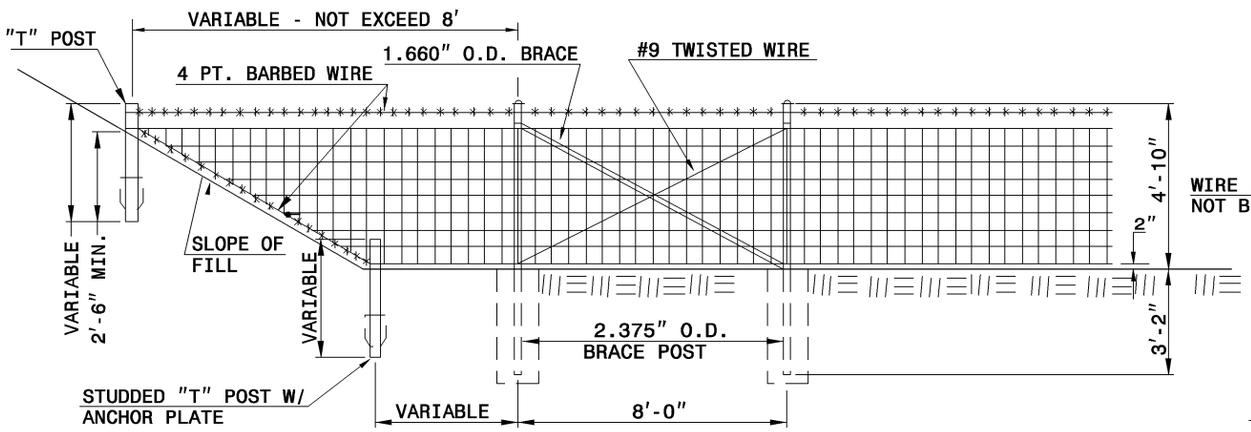

MEHTOD OF ERECTING FENCE FOR FILL SLOPE

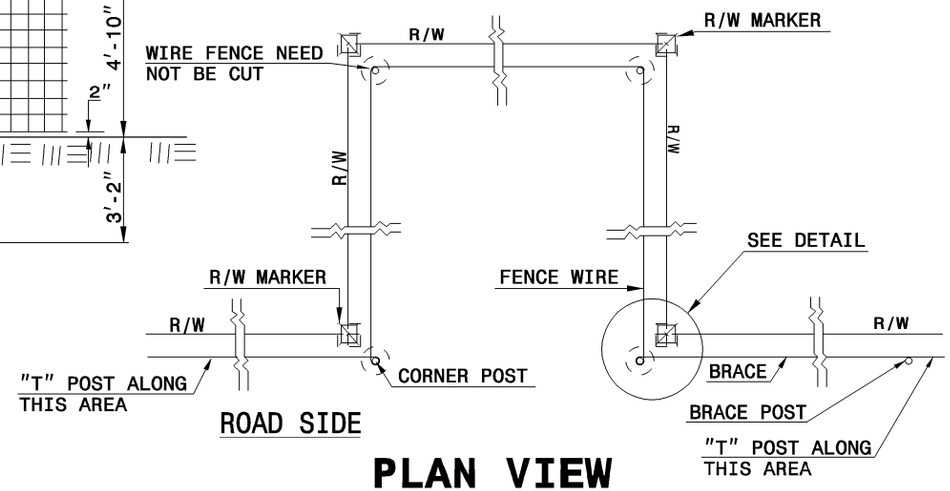

ROAD SIDE

PLAN VIEW

STATE OF
NORTH CAROLINA
DEPT. OF TRANSPORTATION
DIVISION OF HIGHWAYS
RALEIGH, N.C.

7-06

ENGLISH STANDARD DRAWING FOR
WOVEN WIRE FENCE
WITH STEEL POST

SHEET 3 OF 3
866.03

SHEET 3 OF 3
866.03