STATE OF
NORTH CAROLINA
DEPT. OF TRANSPORTATION
DIVISION OF HIGHWAYS
RALEIGH, N.C.

7-06

ENGLISH STANDARD DRAWING FOR

BARBED WIRE FENCE

WITH WOOD POSTS

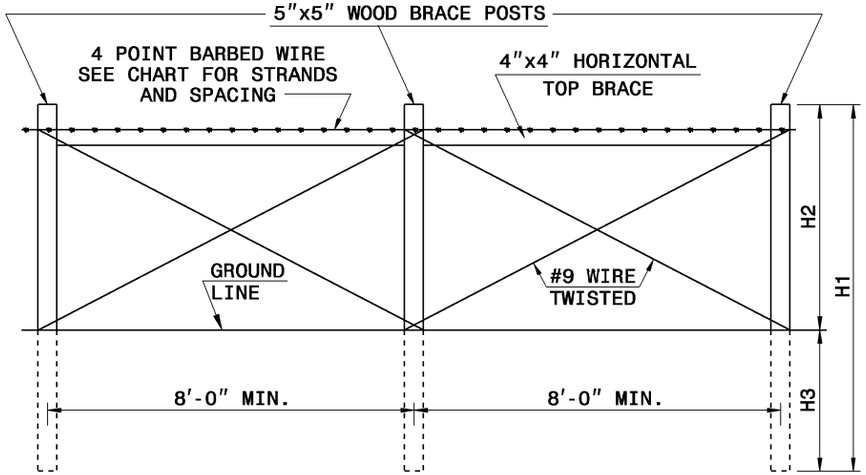

LINE BRACES

(MAXIMUM SPACING 330')

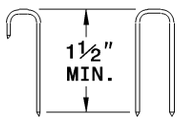

ALTERNATE TYPES OF STAPLES

USE ONE #9 STAPLE OR TWO #16 STAPLES
AT EACH POINT OF ATTACHMENT.

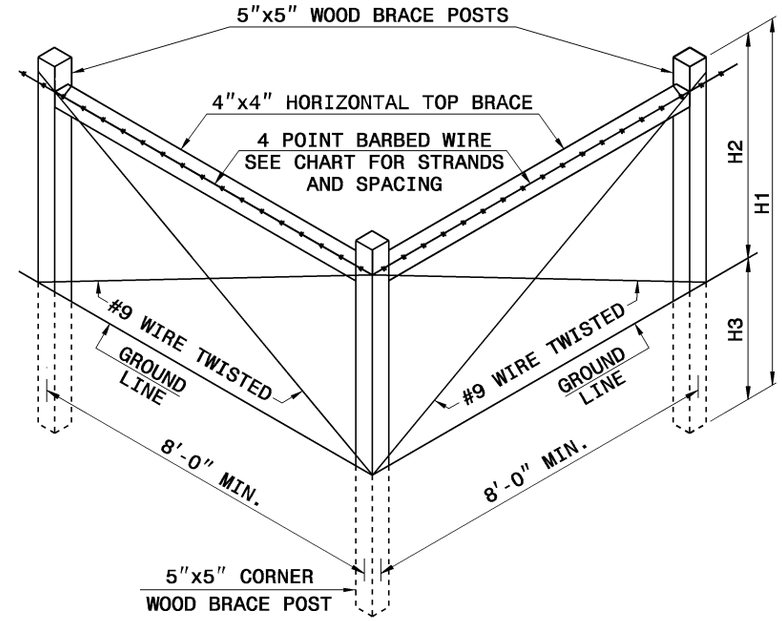

CORNER BRACE

USE WHEN CORNER ANGLE IS 15° OR GREATER

BARBED WIRE FENCE CHART

NUMBER OF BARBED WIRE STRANDS			2	3	4	5	6	7
STRAND SPACING		A	8"	4"	3"	3"	3"	3"
		B	12"	12"	15"	12"	10"	8"
		C	21"	13"	11"	8"	6"	8"
BRACE POSTS	LENGTH	H1	6'-0"	6'-0"	8'-0"	8'-0"	8'-0"	8'-0"
	EXPOSED	H2	3'-5"	3'-5"	4'-11"	4'-11"	4'-11"	4'-11"
	EMBEDMENT	H3	2'-7"	2'-7"	3'-1"	3'-1"	3'-1"	3'-1"
LINE POSTS	LENGTH	H4	6'-0"	6'-0"	7'-6"	7'-6"	7'-6"	7'-6"
	EXPOSED	H5	3'-5"	3'-5"	4'-11"	4'-11"	4'-11"	4'-11"
	EMBEDMENT	H6	2'-7"	2'-7"	2'-7"	2'-7"	2'-7"	2'-7"
HORIZONTAL BRACE		---	8'-0"	8'-0"	8'-0"	8'-0"	8'-0"	8'-0"

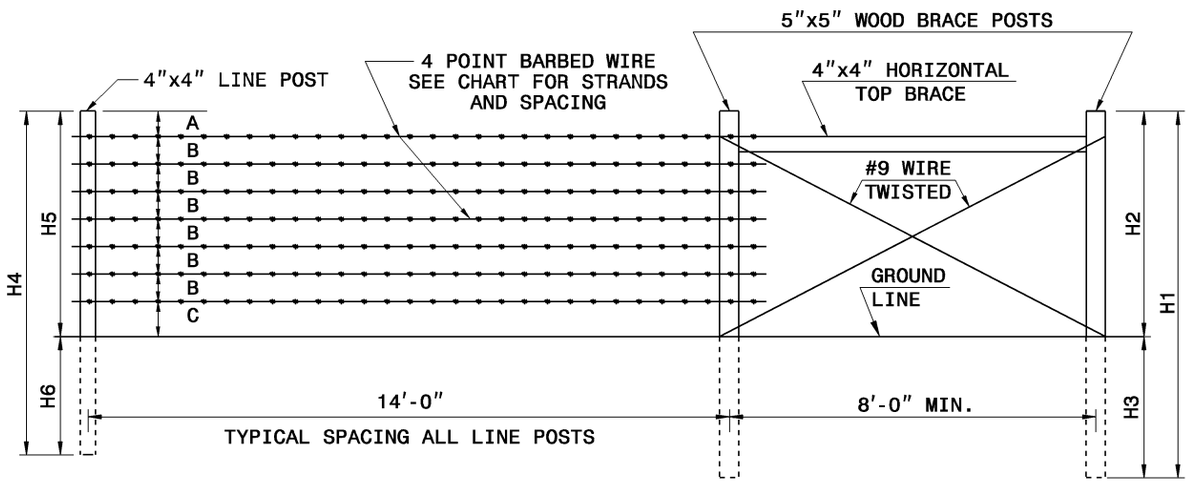

END OR GATE BRACES

STATE OF
NORTH CAROLINA
DEPT. OF TRANSPORTATION
DIVISION OF HIGHWAYS
RALEIGH, N.C.

7-06

ENGLISH STANDARD DRAWING FOR

BARBED WIRE FENCE

WITH WOOD POSTS

SHEET 1 OF 2

866.04

SHEET 1 OF 2

866.04