STATE OF
NORTH CAROLINA
DEPT. OF TRANSPORTATION
DIVISION OF HIGHWAYS
RALEIGH, N.C.

7-06

ENGLISH STANDARD DRAWING FOR

GLARE SCREEN

CHAIN LINK FABRIC/GUARDRAIL MOUNTED

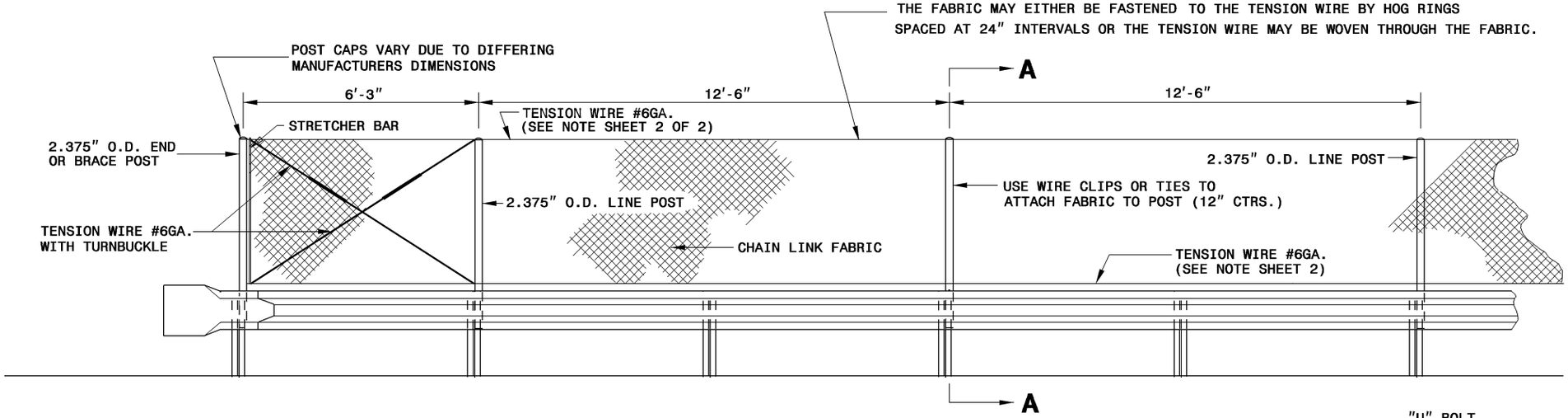

ELEVATION

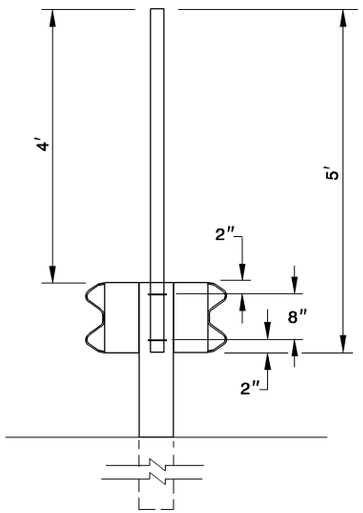

SECTION A-A

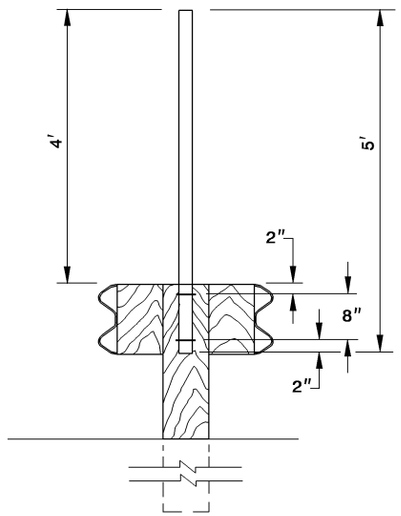

ALTERNATE SECTION A-A

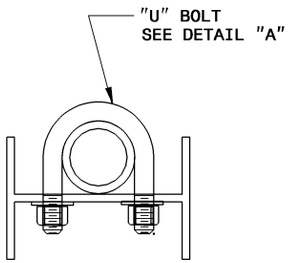

POST MOUNTING TO STEEL GUARDRAIL W6 POST

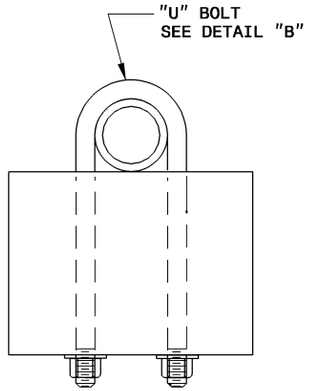

POST MOUNTING TO WOOD GUARDRAIL 6" X 8" POST

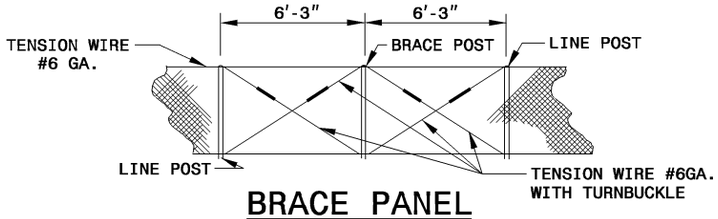

BRACE PANEL ELEVATION

NOTE:
ERECT BRACE PANEL BETWEEN ENDS AT INTERVALS NOT EXCEEDING 350 FT. ERECT ADDITIONAL BRACE POSTS IF SO DIRECTED BY THE ENGINEER. BRACE THE POSTS FROM BOTH SIDES OF POSTS.

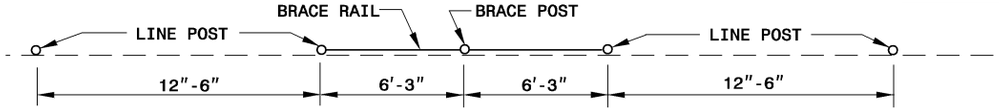

PLAN OF BRACE PANEL

SHEET 1 OF 2

866.05

STATE OF
NORTH CAROLINA
DEPT. OF TRANSPORTATION
DIVISION OF HIGHWAYS
RALEIGH, N.C.

7-06

ENGLISH STANDARD DRAWING FOR

GLARE SCREEN

CHAIN LINK FABRIC/GUARDRAIL MOUNTED

SHEET 1 OF 2

866.05