STATE OF
NORTH CAROLINA
DEPT. OF TRANSPORTATION
DIVISION OF HIGHWAYS
RALEIGH, N.C.

7-06

ENGLISH STANDARD DRAWING FOR

GLARE SCREEN

CHAIN LINK FABRIC-GUARDRAIL MOUNTED

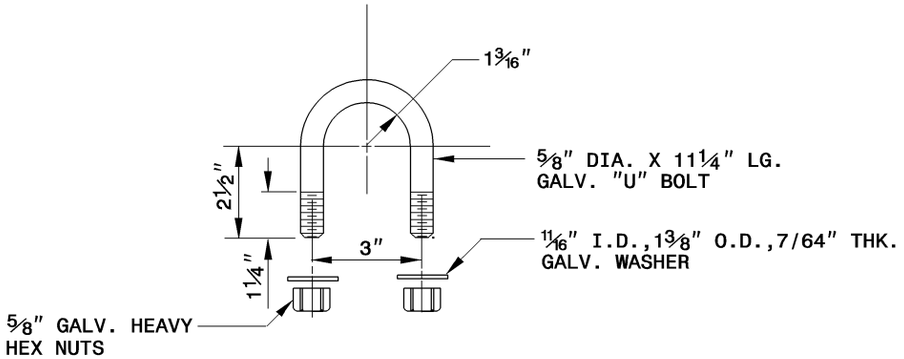

DETAIL-A

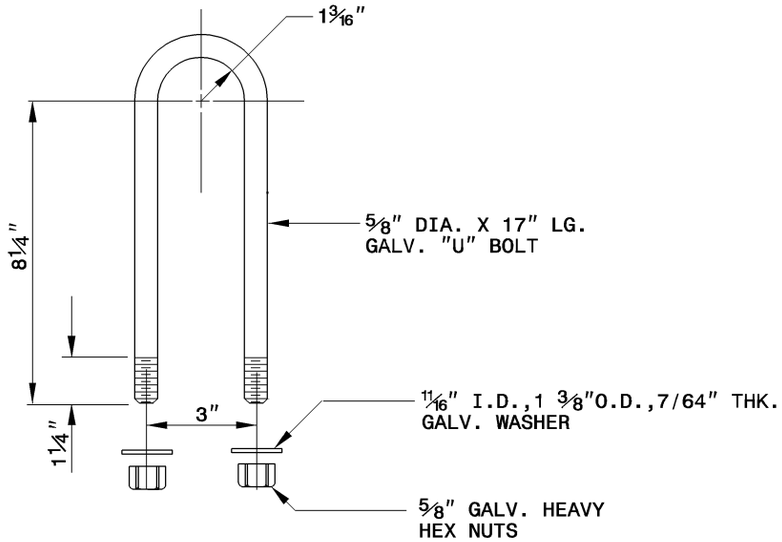

DETAIL-B

NOTES: VINYL COATED GLARE SCREEN

1. USE CHAIN LINK FABRIC 48" WIDE, 1/2" MESH, 11 1/2 GA. HOT DIPPED GALVANIZED STEEL WIRE VINYL COATED SHERWOOD GREEN.
2. USE END (BRACE) POST, LINE POST AND BRACE RAIL GALVANIZED STEEL PIPE VINYL COATED SHERWOOD GREEN.
3. USE FITTINGS AND OTHER APPURTENANCES ALUMINUM ALLOY, GALVANIZED PRESSED STEEL, MALLEABLE OR CAST STEEL VINYL COATED SHERWOOD GREEN. PAINTED FITTINGS ARE NOT ACCEPTABLE.
4. USE TENSION WIRE GALVANIZED STEEL ASTM A752 GRADE 1335 OR 5140 VINYL COATED SHERWOOD GREEN.
5. USE HOG RINGS 9 GA. AND VINYL COATED SHERWOOD GREEN.
6. USE TIRE WIRE 9 GA. GALVANIZED STEEL WIRE VINYL COATED SHERWOOD GREEN.

NOTES: GALVANIZED GLARE SCREEN

1. USE CHAIN LINK FABRIC 48" WIDE, 1/2" MESH, 11 1/2 GA. HOT DIPPED GALVANIZED STEEL WIRE.
2. USE END (BRACE) POST, LINE POST AND BRACE RAIL GALVANIZED STEEL PIPE.
3. USE FITTINGS AND OTHER APPURTENANCES GALVANIZED PRESSED STEEL, MALLEABLE OR CAST STEEL.
4. USE TENSION WIRE GALVANIZED STEEL ASTM A752 GRADE 1335 OR 5140.
5. USE HOG RINGS 9 GA.
6. USE TIRE WIRE 9 GA. GALVANIZED STEEL WIRE.

STATE OF
NORTH CAROLINA
DEPT. OF TRANSPORTATION
DIVISION OF HIGHWAYS
RALEIGH, N.C.

7-06

ENGLISH STANDARD DRAWING FOR

GLARE SCREEN

CHAIN LINK FABRIC-GUARDRAIL MOUNTED

SHEET 2 OF 2
866.05