STATE OF
NORTH CAROLINA
DEPT. OF TRANSPORTATION
DIVISION OF HIGHWAYS
RALEIGH, N.C.

7-06

ENGLISH STANDARD DRAWING FOR

DRAINAGE DITCHES WITH CLASS 'B' RIP RAP

SHEET 1 OF 1

876.04

GENERAL NOTES:

-USE CLASS 'B' RIP RAP.

-CONSTRUCT WIDTH AND SHAPE OF THE DITCHES AS SHOWN OR DIRECTED BY THE ENGINEER.

-USE FILTER FABRIC UNDER CLASS 'B' RIP RAP IF SPECIFIED ON PLANS.

*AS SPECIFIED ON PLANS.

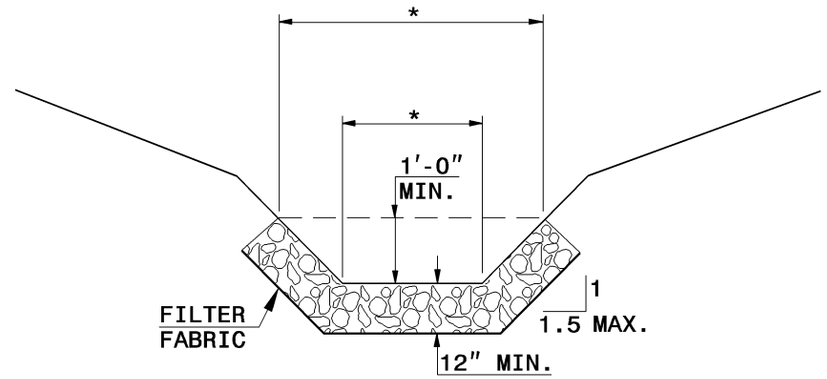

SIDE DRAINS, BASE DITCH OR OTHER OUTLET DITCHES

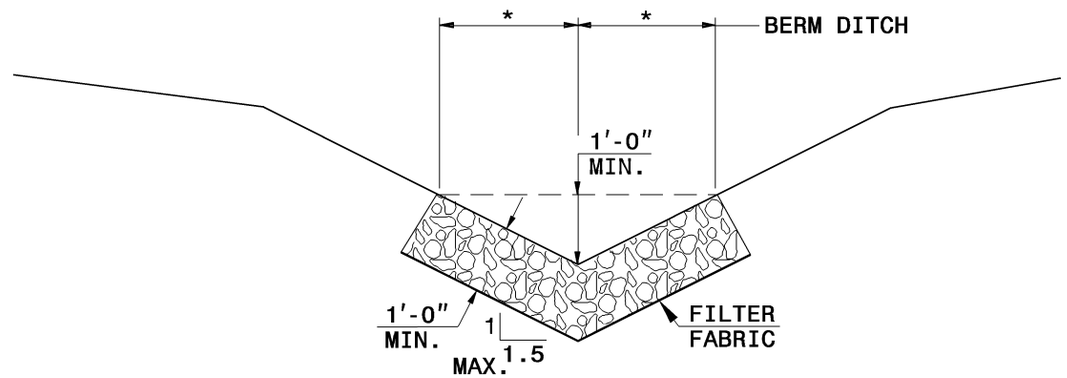

VEE DITCH

STATE OF
NORTH CAROLINA
DEPT. OF TRANSPORTATION
DIVISION OF HIGHWAYS
RALEIGH, N.C.

7-06

ENGLISH STANDARD DRAWING FOR

DRAINAGE DITCHES WITH CLASS 'B' RIP RAP

SHEET 1 OF 1

876.04